ASRock
Industrial

User Manual

iEP(F)-9030-Series

iEP(F)-9040-Series

Version	Date	Description	Page
1.00	2024/08	Initial release	
1.01	2025/01	1. Update the information about the input rating for iEPF-9030S Series with the VGA-PWR600W board. 2. Delete the model iEPF-9030S-EY4 and iEFP-9032S-EY4.	
1.02	2025/04	Add the SOP of VGA-PWR600W Board	
2.1	2025/07	Add iEP(F)-9040 Series information	

Copyright Notice:

Disclaimer:

Specifications and information contained in this documentation are furnished for informational use only and subject to change without notice, and should not be constructed as a commitment by ASRock Industrial Computer Corp. ASRock Industrial Computer Corp. assumes no responsibility for any errors or omissions that may appear in this documentation.

With respect to the contents of this documentation, ASRock Industrial Computer Corp. does not provide warranty of any kind, either expressed or implied, including but not limited to the implied warranties or conditions of merchantability or fitness for a particular purpose.

In no event shall ASRock Industrial Computer Corp., its directors, officers, employees, or agents be liable for any indirect, special, incidental, or consequential damages (including damages for loss of profits, loss of business, loss of data, interruption of business and the like), even if ASRock Industrial Computer Corp. has been advised of the possibility of such damages arising from any defect or error in the documentation or product.

This device complies with Part 15 of the FCC Rules. Operation is subject to the following two conditions:

1. this device may not cause harmful interference, and
2. this device must accept any interference received, including interference that may cause undesired operation.

CALIFORNIA, USA ONLY

The Lithium battery adopted on this motherboard contains Perchlorate, a toxic substance

controlled in Perchlorate Best Management Practices (BMP) regulations passed by the California Legislature. When you discard the Lithium battery in California, USA, please follow the related regulations in advance.

"Perchlorate Material-special handling may apply, see www.dtsc.ca.gov/hazardouswaste/perchlorate"

ASRock Industrial Website: https://www.ASRockInd.com

Important Safety Instructions

For user safety, please read and follow all instructions, Warnings, Cautions, and Notes marked in this manual and on the associated device before handling/operating the device, to avoid injury or damage.

1. Read these safety instructions carefully.
2. Retain this user manual for future reference.
3. Read the Specifications section of this manual for detailed information on the recommended operating environment.
4. Disconnect the equipment from all AC outlets before cleaning. Use only a damp cloth for cleaning. Do not use liquid or sprayed detergent.
5. Place the equipment on a reliable surface during installation. Dropping or letting the equipment fall may cause damage.
6. Do not leave the equipment in an environment with a storage temperature of below -40 °C (-40 °F) or above 85 °C (185 °F) as this may cause damage. The equipment should be stored in a controlled environment.
7. Ensure that the voltage of the power source is correct before connecting the equipment to a power outlet.
8. Position the power cord away from high-traffic areas. Do not place anything over the power cord.
9. If the equipment is not used for a long time, disconnect the equipment from the power source to avoid damage from transient over-voltage.
10. All cautions and warnings on the equipment should be noted.
11. To avoid electrical shock and/or damage to the device:
    - Keep the device away from water or liquid sources.
    - Keep the device away from high heat or humidity.
    - Keep device properly ventilated (do not block or cover ventilation openings).
    - Always use designated voltage and power source settings.
    - Always install and operate the device near an easily accessible electrical outlet.
    - Secure the power cord (do not place any object on/over the power cord).
    - Only install/attach and operate the device on stable surfaces and/or designated mountings.
    - The power cord must be connected to a socket or outlet with a ground connection.

12. If one of the following occurs, have the equipment checked by service personnel:
    - The power cord or plug is damaged.
    - Liquid has penetrated into the equipment.
    - The equipment has been exposed to moisture.
    - The equipment is malfunctioning or does not operate according to the user manual.
    - The equipment has been dropped and damaged.
    - The equipment shows obvious signs of breakage.
13. Never attempt to repair the device, which should only be serviced by qualified technical personnel using suitable tools.
14. Any unverified component may cause unexpected damage. To ensure correct installation, always use the components (e.g., screws) provided in the accessory box.
15. This equipment is not suitable for use in locations where children are likely to be present.
16. The equipment should only be installed in a restricted access area.
17. Restricted Access Location:
    The device must be installed only in a server room or computer room where:
    - Access can only be gained by service persons or by users who have been instructed about the reasons for the restrictions applied to the location and about any precautions that shall be taken.
    - Access is through the use of a tool or lock and key, or other means of security, and is controlled by the authority responsible for the location.
    - Leave enough clearance (25 inches in the front and 30 inches in the back of the rack) to allow the front door to be opened completely and to allow for sufficient airflow.
    - This product is intended for installation only in a Restricted Access Location.
    - This product is not suitable for use with visual display devices in the workplace according to §2 of "the German Ordinance for Work with Visual Display Units.
    - Wall Mount: M4x10mm Screws (for securing the mounting brackets to the chassis)

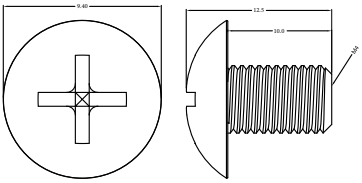

18. The equipment is intended to be supplied by the external power source (UL listed/ IEC 60950-1/ IEC 62368-1 approved) whose output complies with ES1/SELV. To reduce potential safety issues, only the AC adapter provided with the product, a replacement AC adapter provided by ASRock Industrial or an agency, or an AC adapter purchased as an accessory from ASRock Industrial or an agency should be

used with the product.

19. This power adapter (FSP330-AAAN3) is intended to be supplied based on a UL-certified and suitable for use at an operating/storage temperature of 0 °C (32 °F)~ 40 °C (104 °F)/ -20 °C (-4 °F)~80 °C (176 °F), and the current output is rated 24Vdc 13.75A. If you need further assistance, contact ASRock Industrial for additional information.
20. The ambient temperature of the iEP-9030E/9040E series: 70 °C (158°F) max.; the ambient temperature of the iEPF-9030S/9040S series: 75 °C (167°F) max.
21. The terminal block is suitable for V+V-, with 2 units each (16~18AWG), totaling 4 units. The torque value is 0.69Nm. Please ensure the use of copper conductors only. Kindly note that installation must be carried out by a professional.

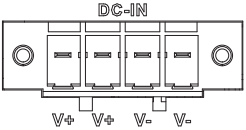

22. This product has passed the CE test for environmental specifications when shielded cable are used for external wiring. Shielded interface cables must be used in order to comply with the emission limits.

Replaceable Batteries

CAUTION
RISK OF EXPLOSION IF BATTERY IS REPLACED BY AN INCORRECT TYPE. DISPOSE OF USED BATTERIES ACCORDING TO THE INSTRUCTIONS.

ATTENTION
RISQUE D'EXPLOSION SI LA PILE EST REMPLACÉE PAR UNE D'UN TYPE INCORRECT. ÉLIMINEZ LES PILES USAGÉES CONFORMÉMENT AUX INSTRUCTIONS.

CAUTION (or Warning)
Hot surface.
Do not touch.

ATTENTION (ou Avertissement)
Surface chaude.
Ne pas touche.

BURN HAZARD

Hot surface! Do not touch! Touching this surface could result in bodily injury. To reduce risk, allow the surface to cool before touching.

CAUTION

The equipment is equipped with a battery-powered real-time clock circuit. There is a risk of explosion if a battery is incorrectly replaced. Replace only with the same or equivalent type as designated by the manufacturer. Discard all used batteries according to the manufacturer's instructions.

LITHIUM-METAL BATTERY WARNING

Danger of explosion if the battery is incorrectly replaced. Replace only with the same or equivalent type designated by the manufacturer. Dispose of used batteries according to the manufacturer's instructions.

WARNING

All interconnection to the EUT is intended for indoor locations, and as a result, the PoE network interconnected to the EUT is considered ES1/SELV, designed exclusively for connection to the PoE network without routing to the outside plant.

WARNING

Input voltage rated 9~36V, 30~18A.

Packing: The unit should be carried with both hands and handled with care.

Maintenance: Use only approved products or a dry applicator to clean and maintain the surfaces.

HDMI®
HIGH-DEFINITION MULTIMEDIA INTERFACE

The terms HDMI™ and HDMI High-Definition Multimedia Interface, and the HDMI logo are trademarks or registered trademarks of HDMI Licensing LLC in the United States and other countries.

UK
CA

Contact Information

If you need to contact ASRock Industrial or want to know more about ASRock Industrial, you're welcome to visit ASRock Industrial's website at https://www.ASRockInd.com; or you may contact your dealer for further information.

ASRock Industrial Incorporation

Email: Info_ipc@asrockind.com

Contents

Chapter 1 Introduction 1

1.1 Key Features 1

1.2 Package List 3

1.3 Order Information 8

1.4 Optional Items 8

1.5 Serial Number Label 9

1.5.1 Serial Number Label Location 9

1.5.2 Serial Number Label Illustration 9

1.6 Specifications 10

1.7 CPU Support List 18

1.8 Dimensions and Size 20

1.9 Block Diagram 28

Chapter 2 Product Overview 30

2.1 System Front Panel 30

2.1.1 System Front Panel I/O Functions 32

2.2 HDD Panel 43

2.3 Drive Tray LEDs 44

2.4 Motherboard 45

2.4.1 Motherboard Layout for iEP(F)-9030 Series/ iEP(F)-9040 Series 45

2.4.2 Motherboard Layout for iEP(F)-9032 Series/ iEP(F)-9042 Series 57

2.4.3 Ignition Control 68

2.5 Other Boards 71

2.5.1 DSC-SATA003-WT Layout and I/O Connectors 71

2.5.2 DSC-PSE002-WT Layout and I/O Connectors 73

2.5.3 DSC-PSE004-WT Layout and I/O Connectors (Optional) 74

2.5.4 DSC-COMDIO002-WT Layout and I/O Connectors 76

2.5.5 DSC-COMDIO003-WT Layout and I/O Connectors (Optional) 78

2.5.6 DSC-COMDIO004SO-WT Layout and I/O Connectors (Optional) 81

2.5.7 DSC-COMDIO005-WT Layout and I/O Connectors (Optional) 84

2.5.8 DSC-COMDIO006-WT Layout and I/O Connectors (Optional) 87

2.5.9 DSC-SLOT005-WT Layout and I/O Connectors (Support PCIe Gen5, 9030S/9032S/9040S/9042S Only) 90

2.5.10 VGA-PWR Layout and I/O Connectors (Optional) 90

2.5.11 VGA-PWR600W Layout and I/O Connectors (Optional) 94

Chapter 3 Hardware Installation and Maintenance 96

3.1 How to Disassemble the System 97

3.2 How to Install the CPU 103

3.3 How to Install the Hard Disk Drive 106

3.4 How to Install the SIM Card 108

3.5 How to Install the Desk Mount Bracket 110

3.6 How to Install the Rubber Foot 111

3.7 How to Install the Memory Module 112

3.8 How to Install the M.2 SSD with Heatsink and Thermal Pad 113

3.9 How to Install the VGA-PWR Card 115

3.9.1 VGA -PWR Board 115

3.9.2 VGA-PWR600W Board 119

3.10 How to Install the Riser Card 125

3.11 How to Install the WiFi Module (M.2 Key E Socket (2230)) 129

3.12 How to Install the 4G/5G module 130

3.13 How to Install the WiFi/4G/5G Antennas and Cables 132

3.13.1 Antennas 132

3.13.2 How to Assemble SMA Cables 133

3.14 How to Assemble Card Holder 135

Chapter 4 UEFI Setup Utility 138

4.1 Introduction 138

4.1.1 Entering BIOS Setup 138

4.1.2 UEFI Menu Bar 139

4.1.3 Navigation Keys 140

4.2 Main Screen 141

4.3 Advanced Screen 142

4.3.1 CPU Configuration 143

4.3.2 Chipset Configuration 145
4.3.3 Intel(R) Time Coordinated Computing 147
4.3.4 Storage Configuration 149
4.3.5 Super IO Configuration 151
4.3.6 ACPI Configuration 154
4.3.7 USB Configuration 155
4.3.8 AMT Configuration 156
4.3.9 Trusted Computing 158
4.3.10 External Ports Control 160

4.4 Hardware Health Event Monitoring Screen 162

4.5 Security Screen 163

4.6 Boot Screen 164

4.7 Exit Screen 165

Chapter 5 Appendix 166

Appendix 1 Power Consumption 166

Appendix 2 Link to the API Library 167

Appendix 3 How to Install Power Supply or Power Adapter 167

Chapter 1 Introduction

Thank you for purchasing iEPF-9030S&9040S-EW4 / iEPF-9032S&9042S-EW4 / iEP-9030E&9040E / iEP-9032E&9042E, a reliable barebone system produced under ASRock Industrial's consistently stringent quality control. It delivers excellent performance with robust design conforming to ASRock Industrial's commitment to quality and endurance.

Because the hardware specifications might be updated, the content of this documentation will be subject to change without notice. In case any modifications of this documentation occur, the updated version will be available on ASRock Industrial's website without further notice. If you require technical support related to this product, please visit our website for specific information about the model you are using.
ASRock Industrial's Website: https://www.ASRockInd.com

The illustrations shown in this manual are examples only. The actual system may differ depending on the product model you purchased.

1.1 Key Features

iEPF-9030S-EW4/iEPF-9040S-EW4

- Intel® 14th Gen Core™ Processors/Intel® Core™ Processors (Series 2) with R680E Chipset
- 2 x 262-pin DDR5 SO-DIMM up to 96GB (48GB per DIMM)
- 1 x PCIe x16 **(PCIe Gen5)** or 2 x PCIe x8 **(PCIe Gen5)**, 2 x PCIe x 4 (PCIe Gen4)
- 2 x M.2 Key M, 2 x M.2 Key B, 1 x M.2 Key E
- 6 x USB 3.2 Gen2x1
- 6 x COM, 4 x SATA3, 8 x DI, 8 x DO
- 5 x Intel 2.5G LAN (2 support PoE, LAN1 supports vPro)
- 1 x Displayport, 1 x HDMI 2.0b, 1 x VGA
- Powerful Edge AI acceleration enabled by the most flexible mechanical, thermal, and power design, with support for 275mm x 138 mm x 60 mm (L x H x D) max. and up to 600W graphic cards

iEPF-9032S-EW4/iEPF-9042S-EW4

- Intel® 14th Gen Core™ Processors/Intel® Core™ Processors (Series 2) with H610 Chipset
- 2 x 262-pin DDR5 SO-DIMM up to 96GB (48GB per DIMM)
- 1 x PCIe x16 **(PCIe Gen5)**
- 1 x M.2 Key M, 2 x M.2 Key B, 1 x M.2 Key E
- 4 x USB 3.2 Gen2x1, 2 x USB 2.0
- 6 x COM, 4 x SATA3, 8 x DI, 8 x DO
- 4 x Intel 2.5G LAN (2 support PoE)

English

- 1 x Displayport, 1 x HDMI 2.0b, 1 x VGA
- Powerful Edge AI acceleration enabled by the most flexible mechanical, thermal, and power design, with support for 275mm x 138 mm x 60 mm (L x H x D) max. and up to 600W graphic cards

iEP-9030E/iEP-9040E

- Intel® 14th Gen Core™ Processors/Intel® Core™ Processors (Series 2) with R680E Chipset
- 2 x 262-pin DDR5 SO-DIMM up to 96GB (48GB per DIMM)
- 2 x M.2 Key M, 2 x M.2 Key B, 1 x M.2 Key E
- 6 x USB 3.2 Gen2x1
- 6 x COM, 4 x SATA3, 8 x DI, 8 x DO
- 5 x Intel 2.5G LAN (2 support PoE, LAN 1 supports vPro)
- 1 x Displayport, 1 x HDMI 2.0b, 1 x VGA

iEP-9032E/iEP-9042E

- Intel® 14th Gen Core™ Processors/Intel® Core™ Processors (Series 2) with H610 Chipset
- 2 x 262-pin DDR5 SO-DIMM up to 96GB (48GB per DIMM)
- 1 x M.2 Key M, 2 x M.2 Key B, 1 x M.2 Key E
- 4 x USB 3.2 Gen2x1, 2 x USB 2.0
- 6 x COM, 4 x SATA3, 8 x DI, 8 x DO
- 4 x Intel 2.5G LAN (2 support PoE)
- 1 x Displayport, 1 x HDMI 2.0b, 1 x VGA

The LAN ports also supporting IEEE 802.3AT PoE (PoE output max. 30W/single port or 30W/two ports shared) only use 12~36V DC in source.

1.2 Package List

iEP-9030E Series/iEP-9040E Series

No.	Accessories	PN	Q'ty	Picture	Description
1	Rubber Foot	NA	4		Protect the device from damage while moving it.
2	#6-32 x 8 Screw for rubber foot	NA	4		To fix the rubber foot.
3	Desk Mount	NA	2		To attach the device to any horizontal surface.
4	M4x10 Screw for desk mount	NA	8		To fix the desk mount to chassis and fix to desk
5	M.2 + 5G Heatsink	NA	1	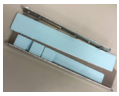	To enhance heat conduction.
6	#6-32 x 5 countersunk Screw for M.2 + 5G Heatsink	NA	3		To fix M.2 + 5G Heatsink.
7	HDD Tray Key	NA	2		To lock/unlock HDD tray.
8	Thermal pad M.2 Key M	NA	1	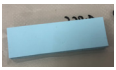	To cool M.2 Key M.
9	Thermal pad M.2 Key B	NA	1		To cool M.2 Key B.
10	Terminal Block 1x4P ST 7.62m	12G082001040AI	1		For power supply.
11	Terminal Block 1x3P ST 5.0m	12G082000033AI	1		Be used to safely connect two or more wires together.

English

No.	Accessories	PN	Q'ty	Picture	Description
12	Terminal Block 1x10P ST 3.5m	12G082000103AI	2		For Digital Input and Digital Output.
13	M3x4 Screw for SSD/HDD	13G020570000AI	4		To fix the SSD/HDD.
14	M2 Nut (w/ Hex Head Bolt, H 3.55mm)	13G020271011AK	1		To fix NUT. (When Key M 2242 & Key E 2230 are used at the same time, NUT needs to exist.)
15	M2x2 Screw	13G020302034AK	3		To fix M.2.
16	Screw for wifi card	13G020305012AK	2		To couse with POE FPC screw.
17	4x4 EPE Bag	15G162200200AI	1		For QIG.
18	QIG	15G06M148000AI	1		Quick Installation Guide

English

iEPF-9030S Series/iEPF-9040S Series

No.	Accessories	PN	Q'ty	Picture	Description
1	Rubber Foot	NA	4		Protect the device from damage while moving it.
2	#6-32 x 8 Screw for rubber foot	NA	4		To fix the rubber foot.
3	Desk Mount	NA	2		To attach the device to any horizontal surface.
4	M4x10 Screw for desk mount	NA	8		To fix the desk mount to chassis and fix to desk
5	M.2 + 5G Heatsink	NA	1		To enhance heat conduction.
6	#6-32 x 5 countersunk Screw for M.2 + 5G Heatsink	NA	3		To fix M.2 + 5G Heatsink.
7	VGA Card holder screw set (including M4 x 20 screw *4 spring washer *4 nut *4 press block *4)	NA	1		To hold the VGA card.
8	HDD Tray Key	NA	2		To lock/unlock HDD tray.
9	thermal pad M.2 Key M	NA	1		To cool M.2 Key M.
10	thermal pad M.2 Key B	NA	1		To cool M.2 Key B.
11	Terminal Block 1x4P ST 7.62m	12G082001040AI	1		For power supply.

English

No.	Accessories	PN	Q'ty	Picture	Description
12	Terminal Block 1x3P ST 5.0m	12G082000033AI	1		Be used to safely connect two or more wires together.
13	Terminal Block 1x10P ST 3.5m	12G082000103AI	2		For Digital Input and Digital Output.
14	M3x4 Screw for SSD/HDD	13G020570000AI	4		To fix the SSD/HDD.
15	M2 Nut (w/ Hex Head Bolt, H 3.55mm)	13G020271011AK	1		To fix NUT. (When Key M 2242 & Key E 2230 are used at the same time, NUT needs to exist.)
16	M2x2 Screw	13G020302034AK	3		To fix M.2.
17	Screw for wifi card	13G020305012AK	2		To couse with POE FPC screw.
18	4x4 EPE Bag	15G162200200AI	1		For QIG.
19	QIG	15G06M148000AI	1		Quick Installation Guide

English

1. *If any items are missing or appear damaged, contact your authorized dealer.*
2. *Based on different configuration, package list may be different.*

Note:

Please refer to the following for more information about the adapters:

330W Power adapter

- Input voltage: 100-240V AC
- Input frequency: 47-63 Hz (±1Hz)
- Rating output current: 13.75A
- Rating output voltage: 24.0 V ±5%

648W PSU

- Input voltage: 100-240V AC
- Input frequency: 47-63 Hz (±1Hz)
- Rating output current: 27A
- Rating output voltage: 24.0 V ±5%

1. *Actual power consumption may differ based on different applications and different hardware configurations. Sufficient power for the entire system is required to meet these specifications. We recommend that 330W adapter (Certified adapter, Output: 24Vdc,13.75A) is used if there is no PCIe add-on cards assembled on the iEPF-9030S Series. Users may use a DC source instead of the optional 330W adapter (Certified adapter, Output: 24Vdc,13.75A) when the power consumption is over 330W in an environment where the temperature is 40°C and DC source should be within 9~36 VDC/30~18A.*
2. *External power source ratings:*
   (1) 330W Power adapter: 24V DC, 13.75A; 648W PSU: 24V DC, 27A; Operating Temperature 40°C.
   (2) 9-36Vdc, min. 30-18A, Operating Temperature refer to Chapter 1.6 for each CPU.

WARNING! Use ONLY approved NRTL LISTED ITE power supply with electrical ratings.

1.3 Order Information

Model Name	PN	Description
iEP-9030E	90PXGCA0-70000000	Intel® 14th Gen Core™ Processors/Intel® Core™ Processors (Series 2) with R680E chipset, W/O CPU, RAM, SSD, ADAPTER
iEP-9032E	90PXGCY0-70000000	Intel® 14th Gen Core™ Processors/Intel® Core™ Processors (Series 2) with H610 chipset, W/O CPU, RAM, SSD, ADAPTER
iEPF-9030S-EW4	90PXGCA0-60000000	Intel® 14th Gen Core™ Processors/Intel® Core™ Processors (Series 2) with R680E chipset, W/O CPU, RAM, SSD, ADAPTER
iEPF-9032S-EW4	90PXGCY0-60000000	Intel® 14th Gen Core™ Processors/Intel® Core™ Processors (Series 2) with H610 chipset, W/O CPU, RAM, SSD, ADAPTER
iEP-9040E	90PXGCA0-78000000	Intel® Core™ Processors (Series 2) with R680E chipset, W/O CPU, RAM, SSD, ADAPTER
iEP-9042E	90PXGCY0-78000000	Intel® Core™ Processors (Series 2) with H610 chipset, W/O CPU, RAM, SSD, ADAPTER
iEPF-9040S-EW4	90PXGCA0-68000000	Intel® Core™ Processors (Series 2) with R680E chipset, W/O CPU, RAM, SSD, ADAPTER
iEPF-9042S-EW4	90PXGCY0-68000000	Intel® Core™ Processors (Series 2) with H610 chipset, W/O CPU, RAM, SSD, ADAPTER

1.4 Optional Items

Model Name	PN	Description
ACPWR CORD EU+KR; L=1.8M (品頭)	14G110001800AK	立訊 /L72AC007-SD-R
AC POWER CORD CN L:1.8M (品頭)	14G110001300AK	I-SHENG/Y646B301912180Q
US PWR CORD, L:1.5M BLACK (品頭)	14G110001100AK	立訊 /L72AC001-SD-R
PSU 648W 24V W/ PFC	04G180004400AI	MEANWELL/HRP-600-24
ADAPTER 330W 24V W/O CONN(PHX)	04G266001200AI	FSP/FSP330-AAAN3/9NA3300215

1.5 Serial Number Label

The serial number is printed below or above the bar code and can be found on the rear side of the chassis.

1.5.1 Serial Number Label Location

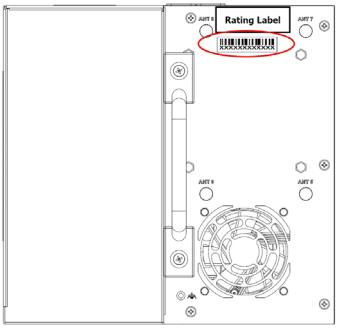

iEPF-9030S Series/iEPF-9040S Series

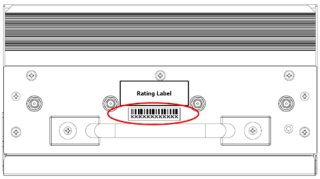

iEP-9030E Series/iEP-9040E Series

1.5.2 Serial Number Label Illustration

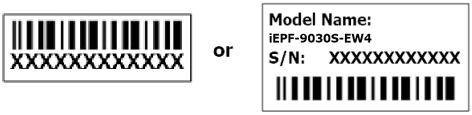

English

1.6 Specifications

iEPF-9030S-EW4&iEPF-9040S-EW4

Processor System	CPU	iEPF-9030S-EW4: Intel® 14th Gen Core™ Processors iEPF-9040S-EW4: Intel® Core™ Processors (Series 2)
	Chipset	Intel® R680E
	Socket	LGA 1700
Memory	Technology	Dual Channel DDR5 5600MHz (ECC memory supported by R680E + Selected CPU)
	Capacity	96 GB (48GB per DIMM)
	Socket	2 x 262-pin SO-DIMM
Graphics	Controller	Intel® UHD Graphics
	DisplayPort	DisplayPort 1.4a , DP++ Max resolution up to 4096x2160@60Hz
	HDMI	HDMI 2.0b Max resolution up to 4096x2160@60Hz
	VGA	Max resolution up to 1920x1200@60Hz
Expansion Slot	PCIe	1 x PCIe Gen5 x16 (single x16 or dual x8), PCIe x16 slot with default power cable can support up to 180W graphic card (275mm x 113 mm x 60 mm (L x H x D), if remove the card holder, it can be limited on 275mm x 138mm x 60 mm) Graphic card can be up to 600W with optional VGA module 1 x PCIe Gen5 x8 (shared with dual x8) 2 x PCIe Gen4 x4
	RF & Antenna	8 x SMA connector hole reserved
	M.2	1 x M.2 (Key E, 2230) with CNVI/PCIe Gen3 x1 and USB 2.0 for Wi-Fi/BT module 1 x M.2 (Key B1, 2280/3042/3052) with PCIe Gen3 x1 / USB 3.2 Gen1 x1 and USB 2.0 for 4G/5G 1 x M.2 (Key B2, 3042/3052) with PCIe Gen3 x1 / USB 3.2 Gen1 x1 and USB 2.0 for 4G/5G
	SIM Socket	2 x Nano SIM Card slot (2 connected to M.2 Key B)
Audio	Interface	Realtek ALC897, High Definition Audio
Ethernet	Controller/ Speed	3 x Intel® i226IT (LAN 1 x vPro Support) 2 x Intel® i226IT (PoE Support, each port suppports IEEE802.3AT PoE, PoE output max. 30W/single port or 30W/two ports shared)
	Controller	5 x RJ-45
Storage	M.2	1 x M.2 (Key M1, 2242/2260/2280) with Gen4 x4 for NVMe SSD 1 x M.2 (Key M2, 2242/2280/22110/25110) with Gen3 x4 for NVMe SSD
	SATA	4 x SATA3 (6Gb/s), support RAID 0/1/5/10 4 x 2.5" HDD/SSD Tray (Default 1 piece)
	CFast (Option)	1 x Type II socket (Shared with SATA3)

Front I/O	DisplayPort	1
	HDMI	1
	VGA	1
	Ethernet	5 x Intel 2.5G LAN
	USB	6 x USB 3.2 Gen2x1, 1 x USB 2.0 internal connector w/ lock function
	Audio	1 x Mic-in, 1 x Line-out
	COM	4 x RS232/422/485 (COM1, COM2-optional Card w/ Isolation Protection, COM5-Isolation Protection, COM6) 2 x RS232 (COM3, COM4)
	DIO	8 DIs/8DOs
Watchdog Timer	Output	From Super I/O to drag RESETCON#
	Interval	256 Segments, 0, 1, 2, ...255sec
Power Requirements	Input PWR	9V~36V VDC with Ignition control and remote power on/off switch. 80V Surge Protection, OVP, UVP, OCP and reverse protection Ignition Power Input w/ 13-mode condition
Environment	Operating Temperature	35W CPU: -40°C~75°C (-40°F~167°F) 46W~65W CPU: -40°C~55°C (-40°F~131°F) (with FAN inside, without Add-on Card) (w/ air flow 0.5~0.8 m/s)
	Storage Temperature	-40°C~85°C (-40°F~185°F)
	Humidity	~95% @ 40°C (non-condensing)
	Shock	Operating: 50 G, half sine 11ms duration with SSD
	Vibration	Operating: 5 Grms, 5-500 Hz, 3 axes with SSD
	ESD	Contact +/-4kV, Air +/-8kV
	EMC	EN61000-6-4/-2, CE & FCC Class A
	Safety	LVD
Mechanical	Construction	Aluminum heatsink + Metal chassis
	Mounting	Desk Mount
	Dimensions	201.7mm (W) x 290.8mm (D) x 209.8mm (H) (7.94" x 11.45" x 8.26")
	Net Weight	10kg
Others	OS Support	Windows 10 & Linux
	TPM	TPM 2.0
	Real-Time Enablement	TSN, TCC support under YOCTO

*The PCIe x16 slot locates at the third slot from the right hand side.

English

iEPF-9032S-EW4&iEPF-9042S-EW4

Processor System	CPU	iEPF-9032S-EW4: Intel® 14th Gen Core™ Processors iEPF-9042S-EW4: Intel® Core™ Processors (Series 2)
	Chipset	Intel® H610
	Socket	LGA 1700
Memory	Technology	Dual Channel DDR5 5600MHz
	Capacity	96 GB (48GB per DIMM)
	Socket	2 x 262-pin SO-DIMM
Graphics	Controller	Intel® UHD Graphics
	DisplayPort	DisplayPort 1.4a , DP++ Max resolution up to 4096x2160@60Hz
	HDMI	HDMI 2.0b Max resolution up to 4096x2160@60Hz
	VGA	Max resolution up to 1920x1200@60Hz
Expansion Slot	PCIe	1 x PCIe Gen5 x16 (single x16), PCIe x16 slot with default power cable can support up to 180W graphic card (275mm x 113mm x 60 mm (L x H x D), if remove the card holder, it can be limited on 275mm x 138mm x 60mm) Graphic card can be up to 600W with optional VGA module
	RF & Antenna	8 x SMA connector hole reserved
	M.2	1 x M.2 (Key E, 2230) with CNVI/PCIe Gen3 x1 and USB 2.0 for Wi-Fi/BT module 1 x M.2 (Key B1, 2280/3042/3052) with PCIe Gen3 x1 / USB 3.2 Gen1 x1 and USB 2.0 for 4G/5G 1 x M.2 (Key B2, 3042/3052) with PCIe Gen3 x1 / USB 3.2 Gen1 x1 and USB 2.0 for 4G/5G
	SIM Socket	2 x Nano SIM Card slot (2 connected to M.2 Key B)
Audio	Interface	Realtek ALC897, High Definition Audio
Ethernet	Controller/ Speed	2 x Intel® i226IT 2 x Intel® i226IT (PoE Support, each port supports IEEE802.3AT PoE, PoE output max. 30W/single port or 30W/two ports shared)
	Controller	4 x RJ-45
Storage	M.2	1 x M.2 (Key M, 2242/2280/22110/25110) with Gen3 x1 for NVMe SSD
	SATA	4 x SATA3 (6Gb/s) 4 x 2.5" HDD/SSD Tray (Default 1 piece)
	CFast (Option)	1 x Type II socket (Shared with SATA3)

Front I/O	DisplayPort	1
	HDMI	1
	VGA	1
	Ethernet	4 x Intel 2.5G LAN
	USB	4 x USB 3.2 Gen2x1, 2 x USB 2.0, 1 x USB 2.0 internal connector w/ lock function
	Audio	1 x Mic-in, 1 x Line-out
	COM	4 x RS232/422/485 (COM1, COM2-optional Card w/ Isolation Protection, COM5-Isolation Protection, COM6) 2 x RS232 (COM3, COM4)
	DIO	8 DIs/8DOs
Watchdog Timer	Output	From Super I/O to drag RESETCON#
	Interval	256 Segments, 0, 1, 2, ...255sec
Power Requirements	Input PWR	9V~36V VDC with Ignition control and remote power on/off switch. 80V Surge Protection, OVP, UVP, OCP and reverse protection Ignition Power Input w/ 13-mode condition
Environment	Operating Temperature	35W CPU: -40°C~75°C (-40°F~167°F) 46W~65W CPU: -40°C~55°C (-40°F~131°F) (with FAN inside, without Add-on Card) (w/ air flow 0.5~0.8 m/s)
	Storage Temperature	-40°C~85°C (-40°F~185°F)
	Humidity	~95% @ 40°C (non-condensing)
	Shock	Operating: 50 G, half sine 11ms duration with SSD
	Vibration	Operating: 5 Grms, 5-500 Hz, 3 axes with SSD
	ESD	Contact +/-4kV, Air +/-8kV
	EMC	EN61000-6-4/-2, CE & FCC Class A
	Safety	LVD
Mechanical	Construction	Aluminum heatsink + Metal chassis
	Mounting	Desk Mount
	Dimensions	201.7mm (W) x 290.8mm (D) x 209.8mm (H) (7.94" x 11.45" x 8.26")
	Net Weight	10kg
Others	OS Support	Windows 10 & Linux
	TPM	TPM 2.0
	Real-Time Enablement	TSN, TCC support under YOCTO

*The PCIe x16 slot locates at the third slot from the right hand side.

iEP-9030E&iEP-9040E

Processor System	CPU	iEP-9030E: Intel® 14th Gen Core™ Processors iEP-9040E: Intel® Core™ Processors (Series 2)
	Chipset	Intel® R680E
	Socket	LGA 1700
Memory	Technology	Dual Channel DDR5 5600MHz (ECC memory supported by R680E + Selected CPU)
	Capacity	96 GB (48 GB per DIMM)
	Socket	2 x 262-pin SO-DIMM
Graphics	Controller	Intel® UHD Graphics
	DisplayPort	DisplayPort 1.4a , DP++ Max resolution up to 4096x2160@60Hz
	HDMI	HDMI 2.0b Max resolution up to 4096x2160@60Hz
	VGA	Max resolution up to 1920x1200@60Hz
Expansion Slot	RF & Antenna	8 x SMA connector hole reserved
	M.2	1 x M.2 (Key E, 2230) with CNVI/PCIe Gen3 x1 and USB 2.0 for Wi-Fi/BT module 1 x M.2 (Key B1, 2280/3042/3052) with PCIe Gen3 x1 / USB 3.2 Gen1 x1 and USB 2.0o fr 4G/5G 1 x M.2 (Key B2, 3042/3052) with PCIe Gen3 x1 / USB 3.2 Gen1 x1 and USB 2.0 for 4G/5G
	SIM Socket	2 x Nano SIM Card slot (2 connected to M.2 Key B)
Audio	Interface	Realtek ALC897, High Definition Audio
Ethernet	Controller/ Speed	3 x Intel® i226IT (LAN1 x vPro Support) 2 x Intel® i226IT (PoE Support, each port supports IEEE802.3AT PoE, PoE output max.30W/single port or 30W/two ports shared)
	Controller	5 x RJ-45
Storage	M.2	1 x M.2 (Key M1, 2242/2260/2280) with Gen4 x4 for NVMe SSD 1 x M.2 (Key M2, 2242/2280/22110/25110) with Gen3 x4 for NVMe SSD
	SATA	4 x SATA3 (6Gb/s), support RAID 0/1/5/10 4 x 2.5" HDD/SSD Tray (Default 1 piece)
	CFast (Option)	1 x Type II socket (Shared with SATA3)

Front I/O	DisplayPort	1
	HDMI	1
	VGA	1
	Ethernet	5 x Intel 2.5G LAN
	USB	6 x USB 3.2 Gen2 x1, 1 x USB 2.0 internal connector w/ lock function
	Audio	1 x Mic-in, 1 x Line-out
	COM	4 x RS232/422/485 (COM1, COM2-optional Card w/ Isolation Protection, COM5-Isolation Protection, COM6) 2 x RS232 (COM3, COM4)
	DIO	8 DIs/8DOs
Watchdog Timer	Output	From Super I/O to drag RESETCON#
	Interval	256 Segments, 0, 1, 2, ...255sec
Power Requirements	Input PWR	9V~36V VDC with Ignition control and remote power on/off switch. 80V Surge Protection, OVP, UVP, OCP and reverse protection Ignition Power Input w/ 13-mode condition
Environment	Operating Temperature	35W CPU: -40°C~70°C (-40°F~158°F) 46W~65W CPU: -40°C~50°C (-40°F~122°F) (w/ air flow 0.5~0.8 m/s)
	Storage Temperature	-40°C~85°C (-40°F~185°F)
	Humidity	~95% @ 40°C (non-condensing)
	Shock	Operating: 50G, half sine 11ms duration with SSD
	Vibration	Operating: 5 Grms, 5-500 Hz, 3 axes with SSD
	ESD	Contact +/-4kV, Air +/-8kV
	EMC	EN61000-6-4/-2, CE & FCC Class A
	Safety	LVD
Mechanical	Construction	Aluminum heatsink + Metal chassis
	Mounting	Desk Mount
	Dimensions	201.7mm (W) x 244.8mm (D) x 109.5mm (H) (7.94" x 9.64" x 4.31")
	Net Weight	6.5kg
Others	OS Support	Windows 10 & Linux
	TPM	TPM 2.0
	Real-Time Enablement	TSN, TCC support under YOCTO

iEP- 9032E&iEP- 9042E

Processor System	CPU	iEP-9032E: Intel® 14th Gen Core™ Processors iEP-9042E: Intel® Core™ Processors (Series 2)
	Chipset	Intel® H610
	Socket	LGA 1700
Memory	Technology	Dual Channel DDR5 5600MHz
	Capacity	96 GB (48 GB per DIMM)
	Socket	2 x 262-pin SO-DIMM
Graphics	Controller	Intel® UHD Graphics
	DisplayPort	DisplayPort 1.4a , DP++ Max resolution up to 4096x2160@60Hz
	HDMI	HDMI 2.0b Max resolution up to 4096x2160@60Hz
	VGA	Max resolution up to 1920x1200@60Hz
Expansion Slot	RF & Antenna	8 x SMA connector hole reserved
	M.2	1 x M.2 (Key E, 2230) with CNVI/PCIe Gen3 x1 and USB 2.0 for Wi-Fi/BT module 1 x M.2 (Key B1, 2280/3042/3052) with PCIe Gen3 x1 / USB 3.2 Gen1 x1 and USB 2.0 for 4G/5G 1 x M.2 (Key B2, 3042/3052) with PCIe Gen3 x1 / USB 3.2 Gen1 x1 and USB 2.0 for 4G/5G
	SIM Socket	2 x Nano SIM Card slot (2 connected to M.2 Key B)
Audio	Interface	Realtek ALC897, High Definition Audio
Ethernet	Controller/ Speed	2 x Intel® i226IT 2 x Intel® i226IT (PoE Support, each port supports IEEE802.3AT PoE, PoE output max.30W/single port or 30W/two ports shared)
	Controller	4 x RJ-45
Storage	M.2	1 x M.2 (Key M, 2242/2280/22110/25110) with Gen3 x1 for NVMe SSD
	SATA	4 x SATA3 (6Gb/s) 4 x 2.5" HDD/SSD Tray (Default 1 piece)
	CFast (Option	1 x Type II socket (Shared with SATA3)
Front I/O	DisplayPort	1
	HDMI	1
	VGA	1
	Ethernet	4 x Intel 2.5G LAN
	USB	4 x USB 3.2 Gen2x1, 2 x USB 2.0, 1 x USB 2.0 internal connector w/ lock function
	Audio	1 x Mic-in, 1 x Line-out
	COM	4 x RS232/422/485 (COM1, COM2- optional Card w/ Isolation Protection, COM5-Isolation Protection, COM6) 2 x RS232 (COM3, COM4)
	DIO	8 DIs/8DOs

Watchdog Timer	Output	From Super I/O to drag RESETCON#
	Interval	256 Segments, 0, 1, 2, ...255sec
Power Requirements	Input PWR	9V~36V VDC with Ignition control and remote power on/off switch. 80V Surge Protection, OVP, UVP, OCP and reverse protection Ignition Power Input w/ 13-mode condition
Environment	Operating Temperature	35W CPU: -40°C~70°C (-40°F~158°F) 46W~65W CPU: -40°C~50°C (-40°F~122°F) (w/ air flow 0.5~0.8 m/s)
	Storage Temperature	-40°C~85°C (-40°F~185°F)
	Humidity	~95% @ 40°C (non-condensing)
	Shock	Operating: 50G, half sine 11ms duration with SSD
	Vibration	Operating: 5 Grms, 5-500 Hz, 3 axes with SSD
	ESD	Contact +/-4kV, Air +/-8kV
	EMC	EN61000-6-4/-2, CE & FCC Class A
	Safety	LVD
Mechanical	Construction	Aluminum heatsink + Metal chassis
	Mounting	Desk Mount
	Dimensions	201.7mm (W) x 244.8mm (D) x 109.5mm (H) (7.94" x 9.64" x 4.31")
	Net Weight	6.5kg
Others	OS Support	Windows 10 & Linux
	TPM	TPM 2.0
	Real-Time Enablement	TSN, TCC support under YOCTO

1.7 CPU Support List

iEPF-9030S-EW4 / iEP-9030E

The Performance of CPUs over 80W will be limited due to power design.

Socket	Family	Number	Core	Frequency	Cache	Power	Since BIOS
1700	Core i9	i9-14901TE(B0)	Raptor Lake-S Refresh	2.3GHz	36MB	45W	P1.10
1700	Core i9	i9-14901KE(B0)	Raptor Lake-S Refresh	3.8GHz	36MB	125W	P1.10
1700	Core i9	i9-14901E(B0)	Raptor Lake-S Refresh	2.8GHz	36MB	65W	P1.10
1700	Core i9	i9-14900T(B0)	Raptor Lake-S Refresh	1.1GHz	36MB	35W	P1.10
1700	Core i9	i9-14900K(B0)	Raptor Lake-S Refresh	3.2GHz	36MB	125W	P1.10
1700	Core i9	i9-14900(B0)	Raptor Lake-S Refresh	2.0GHz	36MB	65W	P1.10
1700	Core i7	i7-14701TE(B0)	Raptor Lake-S Refresh	2.1GHz	33MB	45W	P1.10
1700	Core i7	i7-14701E(B0)	Raptor Lake-S Refresh	2.6GHz	33MB	65W	P1.10
1700	Core i7	i7-14700T(B0)	Raptor Lake-S Refresh	1.3GHz	33MB	35W	P1.10
1700	Core i7	i7-14700K(B0)	Raptor Lake-S Refresh	3.4GHz	33MB	125W	P1.10
1700	Core i7	i7-14700(B0)	Raptor Lake-S Refresh	2.1GHz	33MB	65W	P1.10
1700	Core i5	i5-14600K(B0)	Raptor Lake-S Refresh	3.5GHz	24MB	125W	P1.10
1700	Core i5	i5-14501TE(B0)	Raptor Lake-S Refresh	2.2GHz	24MB	45W	P1.10
1700	Core i5	i5-14501E(B0)	Raptor Lake-S Refresh	3.3GHz	24MB	65W	P1.10
1700	Core i5	i5-14500T(C0)	Raptor Lake-S Refresh	1.7GHz	24MB	35W	P1.10
1700	Core i5	i5-14500(C0)	Raptor Lake-S Refresh	2.6GHz	24MB	65W	P1.10
1700	Core i5	i5-14400T(C0)	Raptor Lake-S Refresh	1.5GHz	20MB	35W	P1.10
1700	Core i5	i5-14400(C0)	Raptor Lake-S Refresh	2.5GHz	20MB	65W	P1.10
1700	Core i5	i5-14400(B0)	Raptor Lake-S Refresh	2.5GHz	20MB	65W	P1.10
1700	Core i3	i3-14100T(H0)	Raptor Lake-S Refresh	2.7Ghz	12MB	35W	P1.10
1700	Core i3	i3-14100(H0)	Raptor Lake-S Refresh	3.5GHz	12MB	60W	P1.10

iEPF-9032S-EW4 / iEP-9032E

The Performance of CPUs over 80W will be limited due to power design.

Socket	Family	Number	Core	Frequency	Cache	Power	Since BIOS
1700	Core i9	i9-14901TE(B0)	Raptor Lake-S Refresh	2.3GHz	36MB	45W	P1.10
1700	Core i9	i9-14901KE(B0)	Raptor Lake-S Refresh	3.8GHz	36MB	125W	P1.10
1700	Core i9	i9-14901E(B0)	Raptor Lake-S Refresh	2.8GHz	36MB	65W	P1.10
1700	Core i9	i9-14900T(B0)	Raptor Lake-S Refresh	1.1GHz	36MB	35W	P1.10
1700	Core i9	i9-14900K(B0)	Raptor Lake-S Refresh	3.2GHz	36MB	125W	P1.10
1700	Core i9	i9-14900(B0)	Raptor Lake-S Refresh	2.0GHz	36MB	65W	P1.10
1700	Core i7	i7-14701TE(B0)	Raptor Lake-S Refresh	2.1GHz	33MB	45W	P1.10
1700	Core i7	i7-14701E(B0)	Raptor Lake-S Refresh	2.6GHz	33MB	65W	P1.10
1700	Core i7	i7-14700T(B0)	Raptor Lake-S Refresh	1.3GHz	33MB	35W	P1.10
1700	Core i7	i7-14700K(B0)	Raptor Lake-S Refresh	3.4GHz	33MB	125W	P1.10
1700	Core i7	i7-14700(B0)	Raptor Lake-S Refresh	2.1GHz	33MB	65W	P1.10
1700	Core i5	i5-14600K(B0)	Raptor Lake-S Refresh	3.5GHz	24MB	125W	P1.10
1700	Core i5	i5-14501TE(B0)	Raptor Lake-S Refresh	2.2GHz	24MB	45W	P1.10
1700	Core i5	i5-14501E(B0)	Raptor Lake-S Refresh	3.3GHz	24MB	65W	P1.10
1700	Core i5	i5-14500T(C0)	Raptor Lake-S Refresh	1.7GHz	24MB	35W	P1.10
1700	Core i5	i5-14500(C0)	Raptor Lake-S Refresh	2.6GHz	24MB	65W	P1.10
1700	Core i5	i5-14401TE(B0)	Raptor Lake-S Refresh	2.0GHz	24MB	45W	P1.10
1700	Core i5	i5-14401E(B0)	Raptor Lake-S Refresh	3.0GHz	24MB	65W	P1.10
1700	Core i5	i5-14400T(C0)	Raptor Lake-S Refresh	1.5GHz	20MB	35W	P1.10
1700	Core i5	i5-14400(C0)	Raptor Lake-S Refresh	2.5GHz	20MB	65W	P1.10
1700	Core i5	i5-14400(B0)	Raptor Lake-S Refresh	2.5GHz	20MB	65W	P1.10
1700	Core i3	i3-14100T(H0)	Raptor Lake-S Refresh	2.7Ghz	12MB	35W	P1.10
1700	Core i3	i3-14100(H0)	Raptor Lake-S Refresh	3.5GHz	12MB	60W	P1.10
1700	Celeron	300T(H0)	Raptor Lake-S Refresh	3.4GHz	6MB	35W	P1.10
1700	Celeron	300(H0)	Raptor Lake-S Refresh	3.9GHz	6MB	46W	P1.10

iEPF-9040S-EW4 / iEP-9040E

The Performance of CPUs over 80W will be limited due to power design.

Socket	Family	Number	Core	Frequency	Cache	Power	Since BIOS
1700	Core 7	251E(B0)	Bartlett Lake-S	2.1GHz	36MB	65W	P1.50
1700	Core 7	251TE(B0)	Bartlett Lake-S	1.4GHz	36MB	45W	P1.50
1700	Core 5	211E(B0)	Bartlett Lake-S	2.7GHz	20MB	65W	P1.50
1700	Core 5	221E(C0)	Bartlett Lake-S	2.7GHz	24MB	65W	P1.50
1700	Core 5	211TE(C0)	Bartlett Lake-S	1.7GHz	20MB	45W	P1.50
1700	Core 5	221TE(C0)	Bartlett Lake-S	1.8GHz	24MB	45W	P1.50
1700	Core 3	201E(H0)	Bartlett Lake-S	3.6GHz	12MB	60W	P1.50
1700	Core 3	201TE(H0)	Bartlett Lake-S	2.9GHz	12MB	45W	P1.50

iEPF-9042S-EW4 / iEP-9042E

The Performance of CPUs over 80W will be limited due to power design.

Socket	Family	Number	Core	Frequency	Cache	Power	Since BIOS
1700	Core 7	251E(B0)	Bartlett Lake-S	2.1GHz	36MB	65W	P1.40
1700	Core 7	251TE(B0)	Bartlett Lake-S	1.4GHz	36MB	45W	P1.40
1700	Core 5	211E(B0)	Bartlett Lake-S	2.7GHz	20MB	65W	P1.40
1700	Core 5	221E(C0)	Bartlett Lake-S	2.7GHz	24MB	65W	P1.40
1700	Core 5	211TE(C0)	Bartlett Lake-S	1.7GHz	20MB	45W	P1.40
1700	Core 5	221TE(C0)	Bartlett Lake-S	1.8GHz	24MB	45W	P1.40
1700	Core 3	201E(H0)	Bartlett Lake-S	3.6GHz	12MB	60W	P1.40
1700	Core 3	201TE(H0)	Bartlett Lake-S	2.9GHz	12MB	45W	P1.40

1.8 Dimensions and Size

iEPF-9030S-EW4/iEPF-9032S-EW4/iEPF-9040S-EW4/iEPF-9042S-EW4

Front View

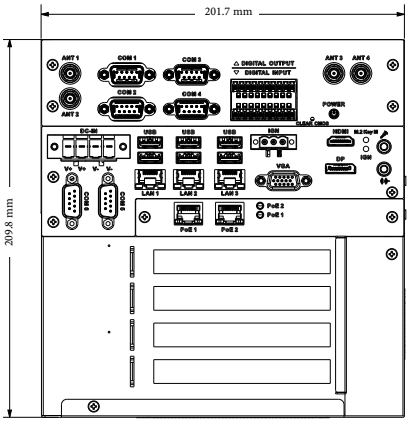

iEPF-9030S-EW4/iEPF-9040S-EW4

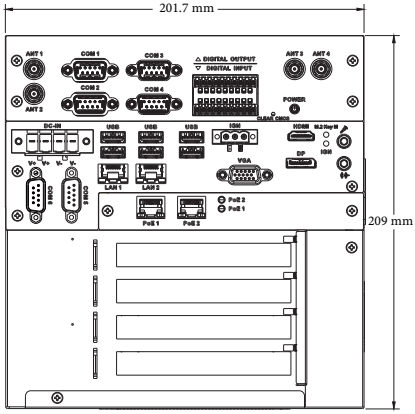

iEPF-9032S-EW4/iEPF-9042S-EW4

English

Top View

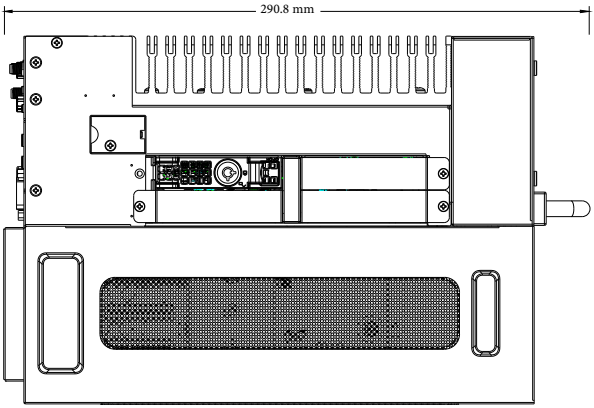

Right-Side View

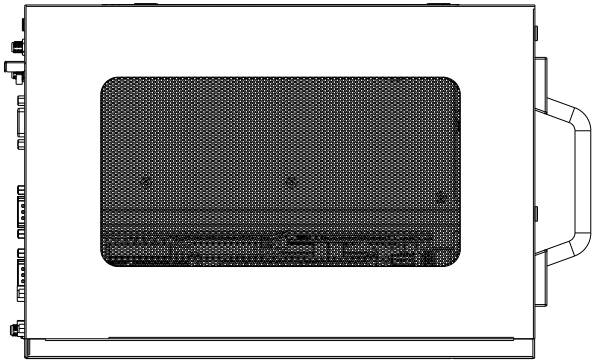

Left-Side View

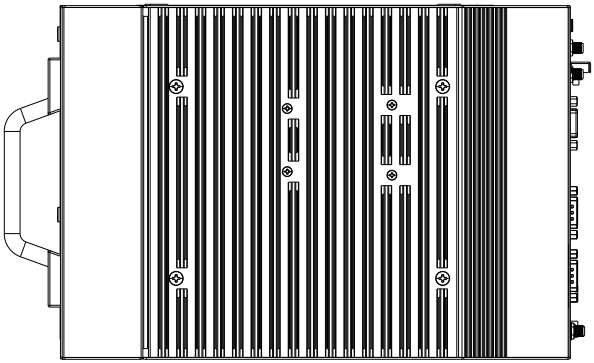

Rear-Side View

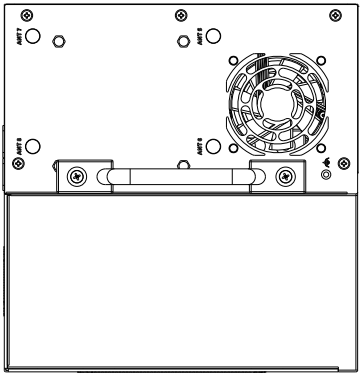

Bottom View

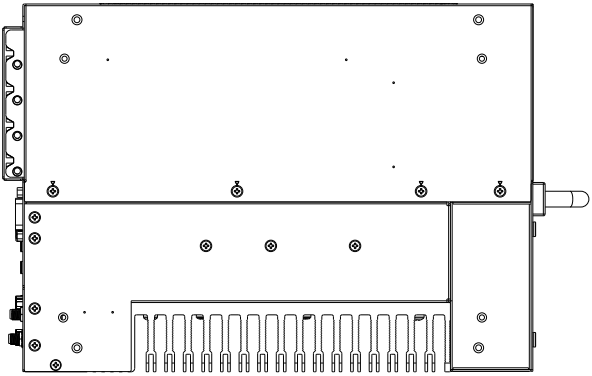

Desk Mounting Bracket

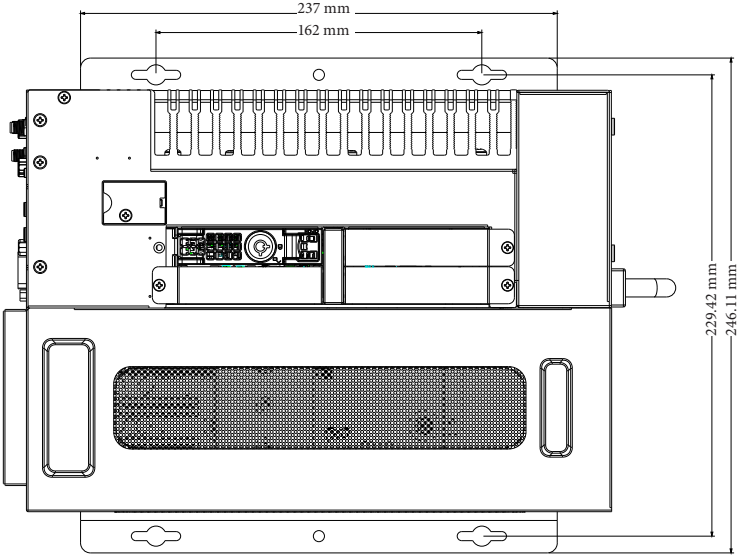

iEP-9030E/iEP-9032E/iEP-9040E/iEP-9042E

Front View

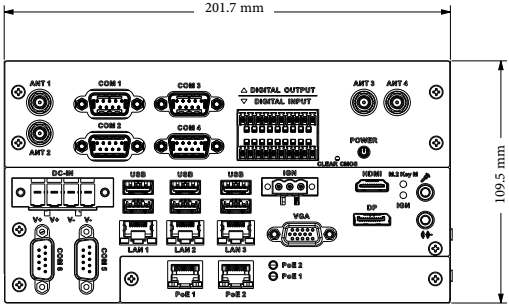

iEP-9030E/iEP-9040E

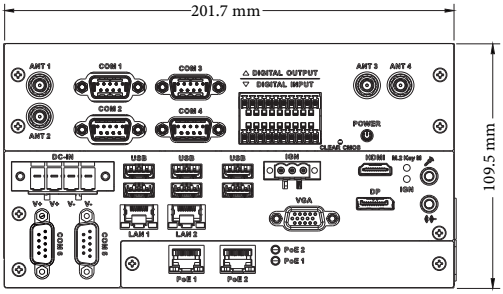

iEP-9032E/iEP-9042E

Top View

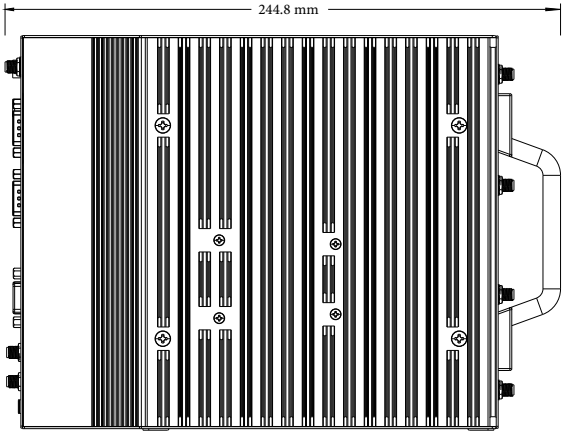

Right-Side View

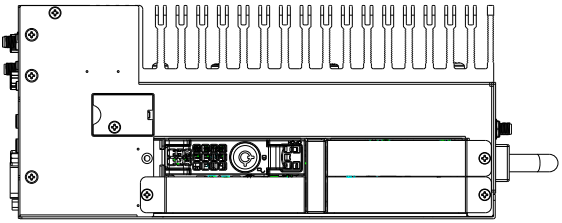

Left-Side View

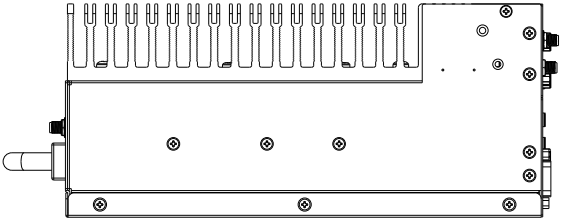

Rear-Side View

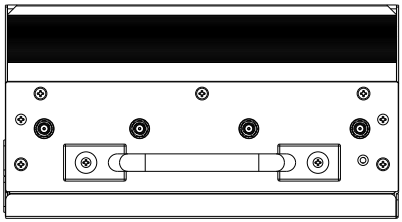

Bottom View

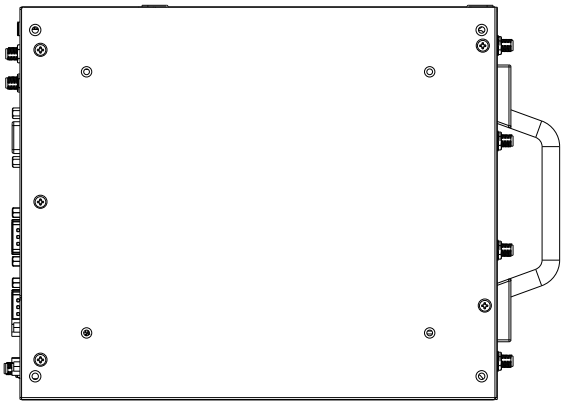

Desk Mounting Bracket

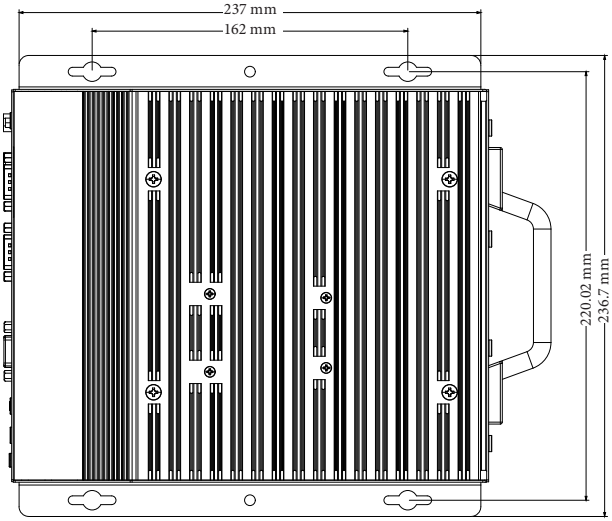

1.9 Block Diagram

iEP(F)-9030 Series/iEP(F)-9040 Series

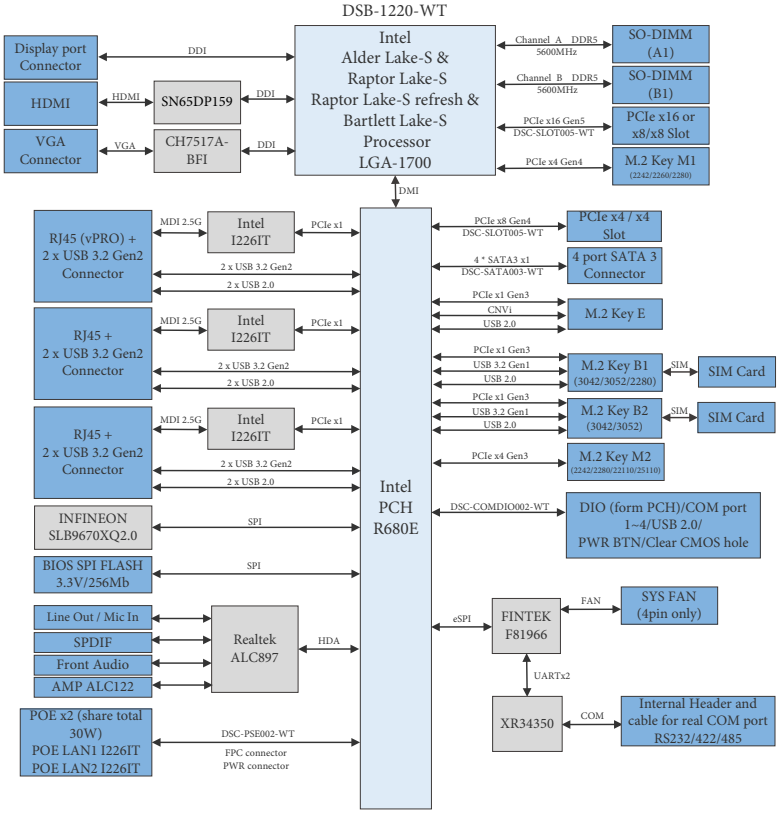

English

iEP(F)-9032 Series/iEP(F)-9042 Series

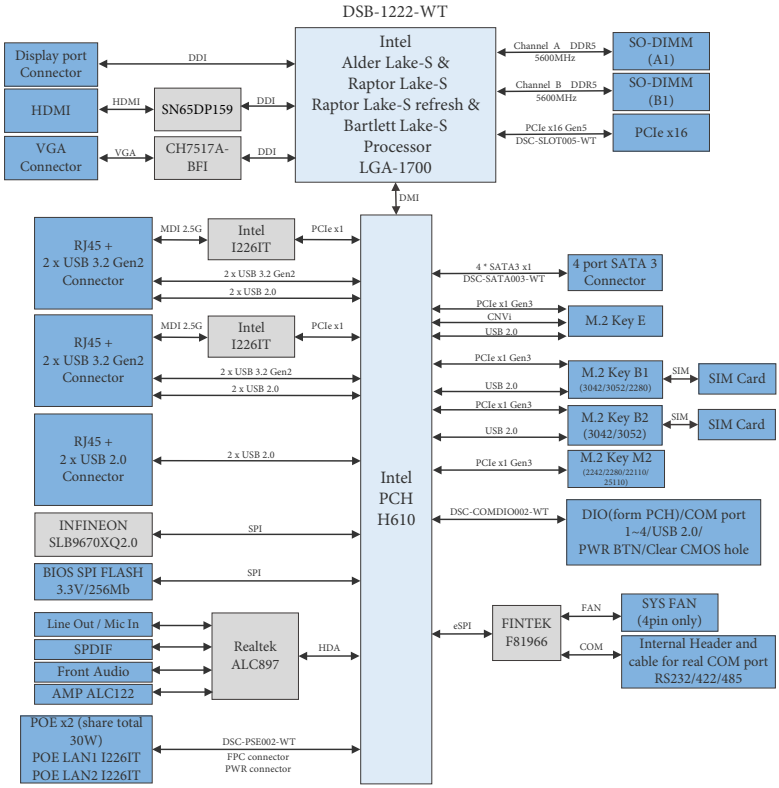

English

Chapter 2 Product Overview

This chapter provides diagrams that display the location of important components of the system.

2.1 System Front Panel

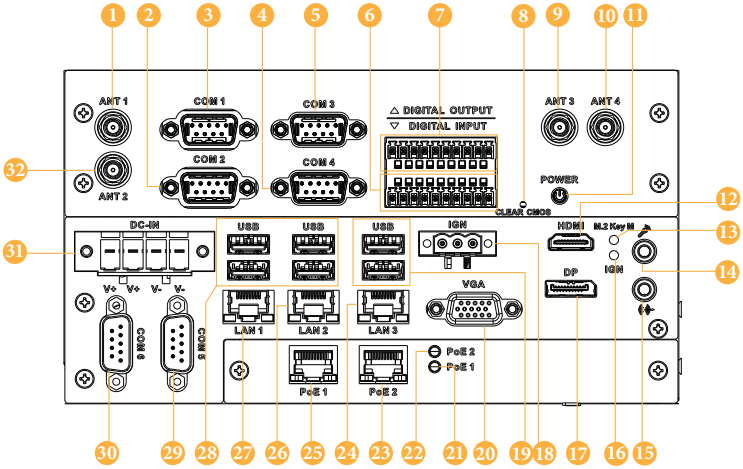

No.	Item	Description
1, 9, 10, 32,	Antenna Port 1~4	Connect the antenna cable to these connectors.
2, 3, 4, 5, 29, 30	Serial Port COM1~6	This system provides six COM ports through D-sub 9-pin connectors. Serial ports COM1, COM2, COM5 and COM6 can support RS232/RS422/RS485. Serial ports COM3 and COM4 can support RS232.
6	Digital Input	This system provides non-isolation digital input/ output circuits for the customer's device. The electrical contacts send or receive digital signals.
7	Digital Output	
8	Clear CMOS Button	Use this button to manually reset the system. Press and hold the reset switch for a few seconds to reboot the system without shutting it off.
11	Power Switch	Press the power switch button to toggle the system power-on and power-off modes. The power button is a non-latched push button with a blue LED indicator. The system is turned on when the button is depressed, and the power LED lights up. If the system hangs, depress the button for 5 seconds to turn off the system completely. To remove power from the system completely, disconnect the power cord from the system.
12	HDMI	For high-definition video and audio connections.

English

No.	Item	Description
13	M.2 Slot (Key M) Status LED	If M.2 slot is populated with M.2 module and working, it will show a blinking green.
14, 15	Audio Mic-in & Line-out	The Mic-in audio connector on the I/O panel supports 5.1 channel HD audio and fully complies with Intel® High Definition Audio (Azalia) specifications. Connect stereo speakers to the Mic-out connector for better sound quality.
16	IGN Status LED	If the IGN is connected and working, it will show solid green.
17	DisplayPort	DisplayPort supports channel dual mode and up to 4096x2160 resolution at 60 Hz.
18	Remote Power On/Off Switch (IGN)	This switch is for ignition power control and operation. Use the switch to remotely monitor or turn on/off the ignition signal for in-vehicle applications, for instance.
19	USB 3.2 Gen2x1 Ports (R680E SKU) USB 2.0 Ports (H610 SKU)	This system provides two kinds of USB ports based on SKUs on the I/O panel. 2 x USB 3.2 Gen2x1 Ports (R680E SKU) 2 x USB 2.0 Ports (H610 SKU)
20	VGA Port	Use VGA cable to connect the system to your monitor.
21, 22	PoE Port Status LED (PoE1&PoE2)	If the PoE1 or PoE2 port is connected and working, it will show solid green.
24, 26, 27	LAN RJ-45 Port (LAN1-3: R680E SKU; LAN1-2: H610 SKU)	There are two types of LEDs on the LAN port. Please refer to the "Ethernet Ports LED" section.
23, 25	LAN RJ-45 PoE Port (PoE 1~2)	
28	USB 3.2 Gen2x1 Ports (R680E & H610 SKU)	This system provides four USB 3.2 Gen2 ports for R680E SKU and H610 SKU on the I/O panel.
31	DC Power Input (DC-IN)	Insert a power cable to this connector for power supply.

➢ The PoE ports on the system are only be linked to the PoE networks in the indoor environment. They would be not connected the networks in the outdoor space.

2.1.1 System Front Panel I/O Functions

Serial Ports (COM1~COM6)

(1) No. 3 : COM1
No. 2 : COM2
No. 5 : COM3
No. 4 : COM4
No. 29 : COM5
No. 30 : COM6

(2) System front panel location

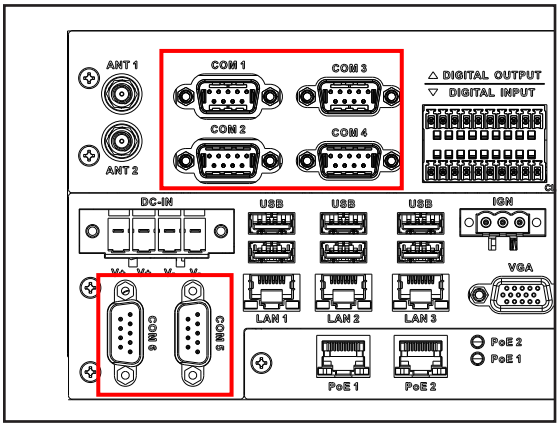

(3) Icon / Pin definition:

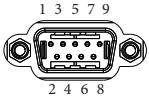

Pin	RS232	RS422	RS485
1	DCD, Data Carrier Detect	TX-	RTX-
2	RXD, Receive Data	TX+	RTX+
3	TXD, Transmit Data	RX+	N/A
4	DTR, Data Terminal Ready	RX-	N/A
5	GND	GND	GND
6	DSR, Data Set Ready	N/A	N/A
7	RTS, Request To Send	N/A	N/A
8	CTS, Clear To Send	N/A	N/A
9	N/A	N/A	N/A

English

Digital Input/Output

(1) No. 6 : Digital Input

No. 7 : Digital Output

(2) System front panel location

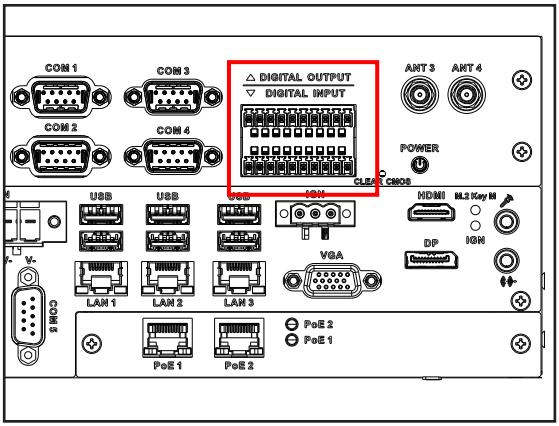

(3) Icon / Pin definition:

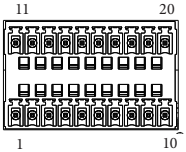

Pin	Signal	Pin	Signal
1	DIO0(SIO_GP70)	11	DIO8(SIO_GP80)
2	DIO1(SIO_GP71)	12	DIO9(SIO_GP81)
3	DIO2(SIO_GP72)	13	DIO10(SIO_GP82)
4	DIO3(SIO_GP73)	14	DIO11(SIO_GP83)
5	DIO4(SIO_GP74)	15	DIO12(SIO_GP84)
6	DIO5(SIO_GP75)	16	DIO13(SIO_GP85)
7	DIO6(SIO_GP76)	17	DIO14(SIO_GP86)
8	DIO7(SIO_GP77)	18	DIO15(SIO_GP87)
9	GND	19	+5V
10	GND	20	GND

HDMI2.0b Port

(1) No. 12 : HDMI2.0b Port

(2) System front panel location

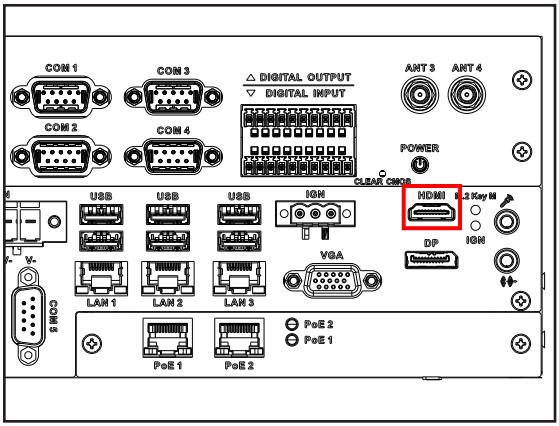

(3) Icon / Pin definition:

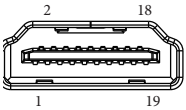

Pin	Signal	Pin	Signal
1	TMDS Data2+	11	TMDS Clock Shield
2	TMDS Data2 Shield	12	TMDS Clock-
3	TMDS Data2-	13	NA
4	TMDS Data1+	14	Reserved
5	TMDS Data1 Shield	15	DDC Clock
6	TMDS Data1-	16	DDC Data
7	TMDS Data0+	17	DDC
8	TMDS Data0 Shield	18	+5V Power
9	TMDS Data0-	19	Hot Plug Detect
10	TMDS Clock+	20	

M.2 Slot (Key M) Status LED

(1) No. 13 : M.2 Key-M

(2) System front panel location

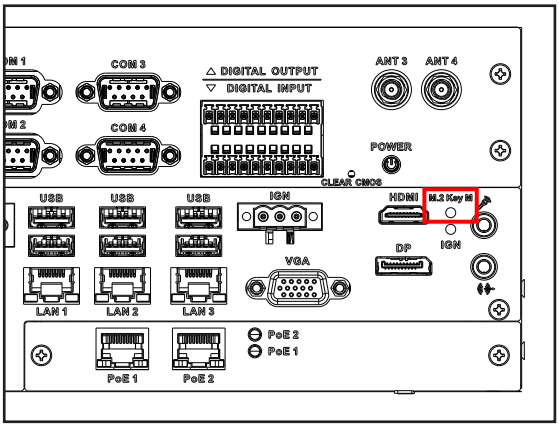

(3) Description:

Status	Description
Blinking Green	M.2 Slot (Key M) on the motherboard is populated with a M.2 module.
Off	Empty M.2 Slot (Key M)

Display Ports 1.4a

(1) No. 17 : Display Port

(2) System front panel location

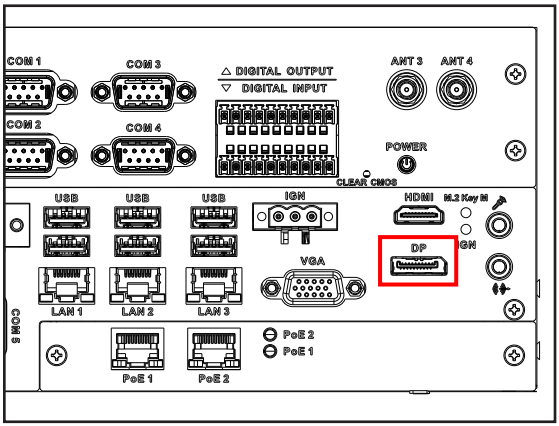

(3) Icon / Pin definition:

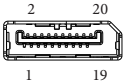

Pin	Signal	Pin	Signal
1	ML_Lane 0(p)	11	GND
2	GND	12	ML_Lane 3(n)
3	ML_Lane 0(n)	13	GND
4	ML_Lane 1(p)	14	GND
5	GND	15	AUX_CH(p)
6	ML_Lane 1(n)	16	GND
7	ML_Lane 2(p)	17	AUX_CH(n)
8	GND	18	Hot Plug
9	ML_Lane 2(n)	19	DP_PWR Return
10	ML_Lane 3(p)	20	DP_PWR

IGN Status LED

(1) No. 18 : IGN Status LED

(2) System front panel location

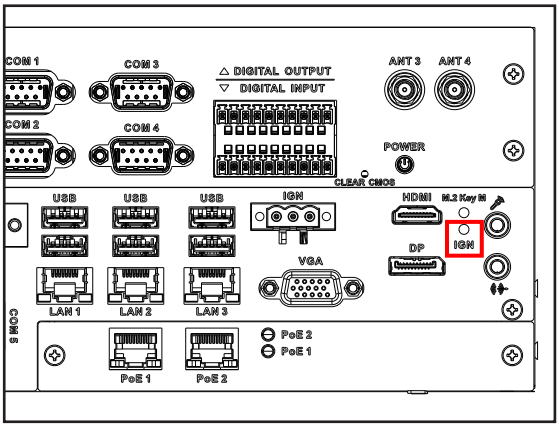

(3) Description:

Status	Description
Solid Green	The IGN connector is connected and working normally.
Off	No connection

USB 3.2 Gen2/USB 2.0 Ports

(1) No. 19 : USB 3.2 Gen2x1 Ports (R680E SKU)
USB 2.0 Ports (H610 SKU)

(2) System front panel location

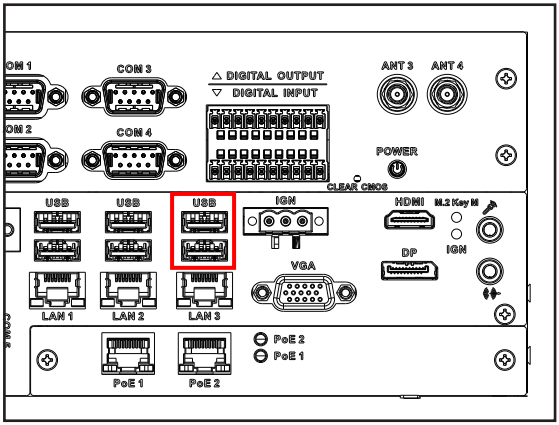

(3) Icon / Pin definition:

USB 3.2 Gen2x1

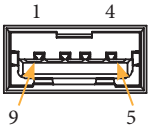

Pin	Signal	Pin	Signal
1	+5V_USB_PWR	6	SSRX+
2	USB_D-	7	GND
3	USB_D+	8	SSTX-
4	GND	9	SSTX+
5	SSRX		

USB 2.0 Port

Pin	Signal	Pin	Signal
1	+5V_USB_PWR	3	DATA+
2	DATA-	4	GND

English

VGA Port

(1) No. 20 : VGA Port

(2) System front panel location

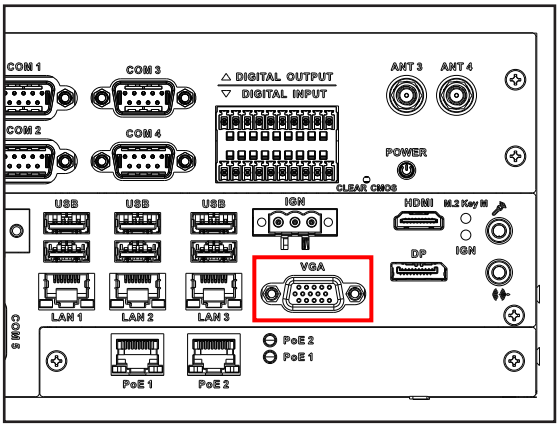

(3) Icon / Pin definition:

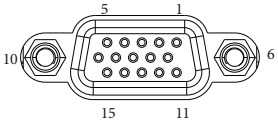

Pin	Signal	Pin	Signal
1	+5V	9	N/A
2	DATA-	10	GND
3	DATA+	11	N/A
4	GND	12	SDA
5	GND	13	HSync
6	RED_RTN	14	VSync
7	GREEN_RTN	15	SCL
8	BLUE_RTN		

PoE Ports Status LED

(1) No. 21 : PoE1 Port Status LED (PoE1)
No. 22 : PoE2 Port Status LED (PoE2)

(2) System front panel location

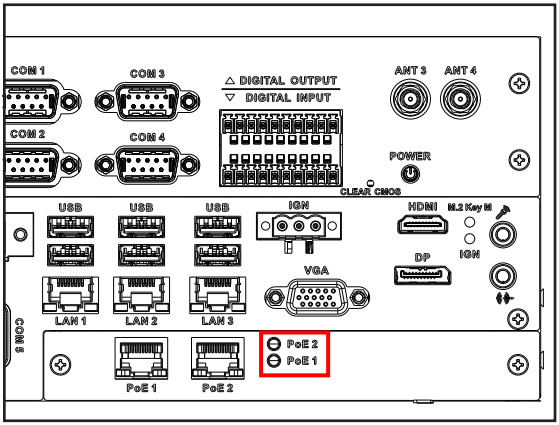

(3) Description:

PoE Port	Status	Description
PoE1	Solid Green	PoE1 Port is connected to a PoE device
	Off	Non PoE connection
PoE2	Solid Green	PoE2 Port is connected to a PoE device
	Off	Non PoE connection

Ethernet Ports LED

(1) No. 23 : LAN RJ-45 PoE Port (PoE 2)
No. 24 : LAN RJ-45 Port (LAN3)(R680E SKU only)
No. 25 : LAN RJ-45 PoE Port (PoE 1)
No. 26 : LAN RJ-45 Port (LAN 2)
No. 27 : LAN RJ-45 Port (LAN 1, supports vPro)

(2) System front panel location

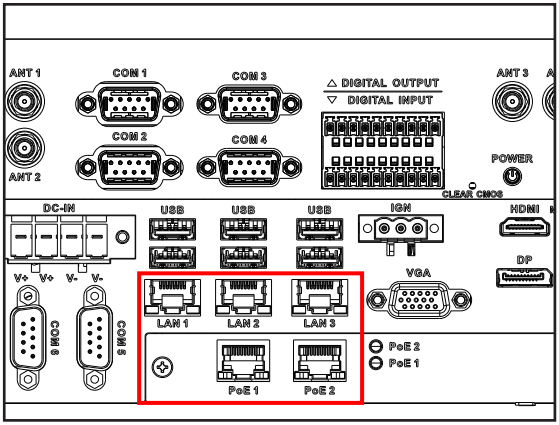

(3) Icon / Pin definition:

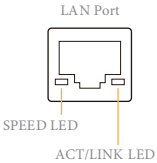

Port	LED Type	LED Color	10Mbps	100Mbps	1000Mbps	2500Mbps
LAN1~ LAN3	ACT/LINK LED	Yellow	Twinkling Yellow	Twinkling Yellow	Twinkling Yellow	Twinkling Yellow
	SPEED LED	Green/ Orange	Off	Off	Solid Orange	Solid Green
PoE LAN1~ LAN2	ACT/LINK LED	Green	Twinkling Green	Twinkling Green	Twinkling Green	Twinkling Green
	SPEED LED	Green/ Orange	Off	Off	Solid Orange	Solid Green

English

USB 3.2 Gen1/Gen2 Ports

(1) No. 28 : 4 x USB3.2 Gen2 x1 Ports (R680E & H610 SKU)

(2) System front panel location

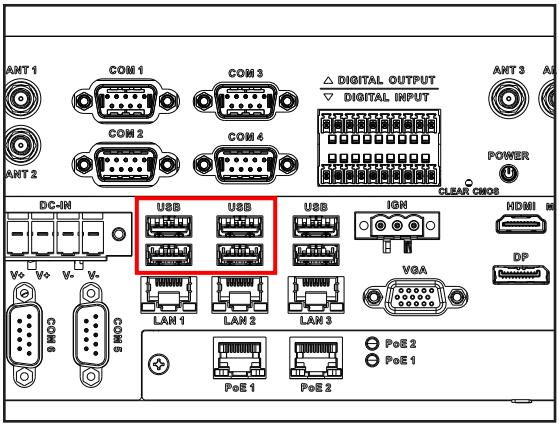

(3) Icon / Pin definition:

USB 3.2 Gen2x1

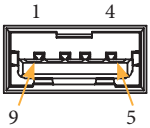

Pin	Signal	Pin	Signal
1	+5V_USB_PWR	6	SSRX+
2	USB_D-	7	GND
3	USB_D+	8	SSTX-
4	GND	9	SSTX+
5	SSRX		

English

2.2 HDD Panel

iEP(F)-9030 Series/iEP(F)-9040 Series

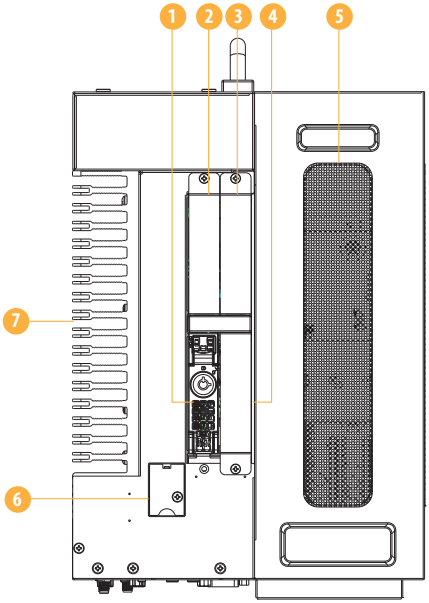

No.	Description
1	2.5" HDD/SSD Tray (HDD0)
2	2.5" HDD/SSD Tray (HDD1)
3	2.5" HDD/SSD Tray (HDD3)
4	2.5" HDD/SSD Tray (HDD2)
5	Side Vent (iEPF-9030S&9040S Series only)
6	2 x SIM Card Slots (SIM1 & SIM2 are for M.2 B key slot)
7	System Heatsink

2.3 Drive Tray LEDs

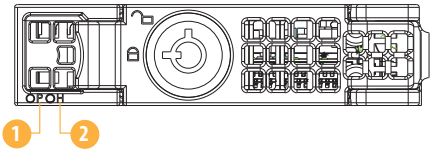

No.	Description
1	HDD Power LED
2	HDD Activity LED

Status LED Definitions

HDD LED Type	Status	Description
HDD Power LED	Blue	HDD powered-on
	Off	No power to HDD
HDD Activity LED	Solid Green	HDD active
	Blinking Green	HDD accessing or reading
	Off	HDD powered-off

2.4 Motherboard

2.4.1 Motherboard Layout for iEP(F)-9030 Series/iEP(F)-9040 Series

Top Side

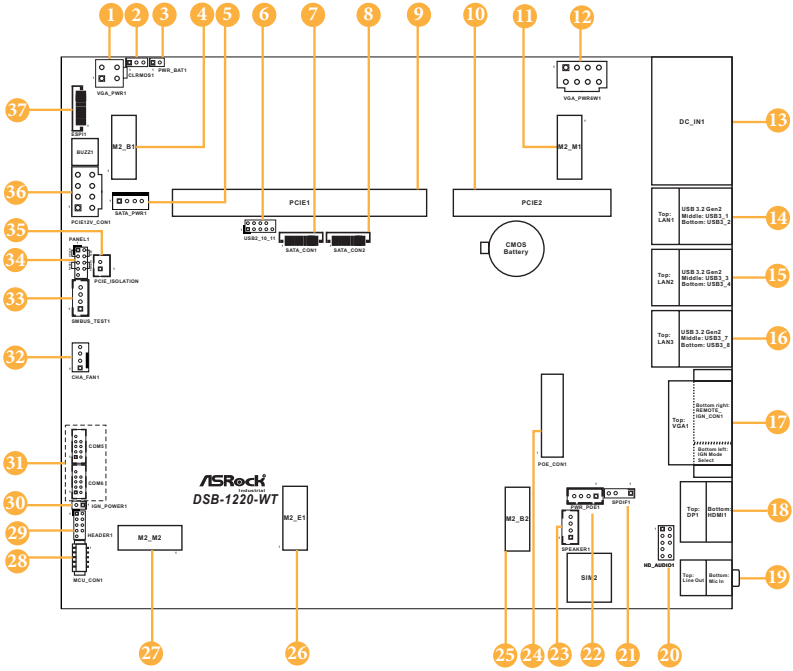

Bottom Side

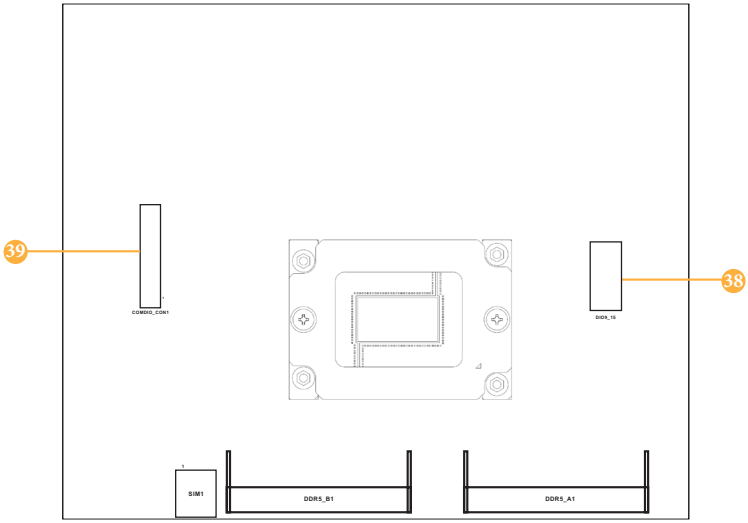

1 : 4-Pin 12V ATX Power Connector (VGA_PWR1)

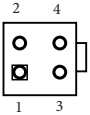

Pin	Signal Name
1	GND
2	GND
3	DC Input
4	DC Input

Please connect a DC +9V~+36V power supply to this connector.

2 : Clear CMOS Header (CLRMOS1)

1-2 : Normal (Default)
2-3 : Clear CMOS

NOTE: CLRMOS1 allows you to clear the data in CMOS. To clear and reset the system parameters to default setup, please turn off the computer and unplug the power cord from the power supply. After waiting for 15 seconds, use a jumper cap to short pin2 and pin3 on CLRMOS1 for 5 seconds. However, please do not clear the CMOS right after you update the BIOS. If you need to clear the CMOS when you just finished updating the BIOS, you must boot up the system first, and then shut it down before you do the clear-CMOS action. Please be noted that the password, date, time, user default profile will be cleared only if the CMOS battery is removed.

3 : PWR_BAT1

Open : Normal (Default)
Short : Charge Battery*

*Only supported by chargeable battery.

4 : M.2 Key-B Socket (M2_B1)

Pin	Signal Name	Pin	Signal Name
1	NA	2	+3.3V
3	GND	4	+3.3V
5	GND	6	FuLL_Card_ Power_off
7	USB_D+	8	W_DISABLE
9	USB_D-	10	WWAN_ LED#
11	GND		
21	GND	20	NA
23	NA	22	NA
25	NA	24	NA
27	GND	26	NA
29	USB3_RX-	28	NA
31	USB3_RX+	30	UIM_RESET
33	GND	32	UIM_CLK
35	USB3_TX-	34	UIM_DATA
37	USB3_TX+	36	UIM_PWR
39	GND	38	NA
41	PERn0	40	NA
43	PERP0	42	NA
45	GND	44	NA
47	PETn0	46	NA
49	PETP0	48	NA
51	GND	50	PERST#
53	PEFCLKn	52	CLKREQ#
55	PEFCLKp	54	WAKE#
57	GND	56	NA
59	NA	58	NA
61	NA	60	NA
63	NA	62	NA
65	NA	64	NA
67	NA	66	NA
69	NA	68	NA
71	GND	70	+3.3V
73	GND	72	+3.3V
75	NA	74	+3.3V

5 : SATA Power Output Connector (SATA_PWR1)

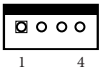

Pin	Signal Name
1	+3V
2	+3V
3	+5V
4	+5V

6 : USB 2.0 Header (USB2_10_11)

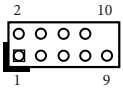

Pin	Signal Name	Pin	Signal Name
1	USB_PWR	2	USB_PWR
3	P-	4	P-
5	P+	6	P+
7	GND	8	GND
9	DUMMY	10	

English

7 : SATA Connector (SATA_CON1)

Pin	Signal Name
1	GND
2	SATA_TXP4
3	SATA_TXN4
4	GND
5	SATA_RXP4
6	SATA_RXN4
7	GND
8	SATA_TXP5
9	SATA_TXN5
10	GND
11	SATA_RXP5
12	SATA_RXN5
13	GND
14	NA
15	NA
16	NA
17	NA
18	SATA_SEL1
19	SATA_SEL2
20	CFAST_SEL1

8 : SATA Connector (SATA_CON2)

Pin	Signal Name
1	GND
2	SATA_TXP6
3	SATA_TXN6
4	GND
5	SATA_RXP6
6	SATA_RXN6
7	GND
8	SATA_TXP7
9	SATA_TXN7
10	GND
11	SATA_RXP7
12	SATA_RXN7
13	GND
14	NA
15	NA
16	NA
17	NA
18	NA
19	NA
20	NA

9 : PCIE1

Pin	Signal Name	Pin	Signal Name
A1	GND	B1	+12V
A2	+12V	B2	+12V
A3	+12V	B3	+12V
A4	X16_ CLKREQ#_ R	B4	GND
A5	PCH_ ECLK_X8	B5	SMB_CLK_ MAIN
A6	PCH_ ECLK_X8#	B6	SMB_ MAIN_ MAIN
A7	SMB_CLK	B7	GND
A8	SMB_DATA	B8	+3V
A9	+3V	B9	RESERVED
A10	+3V	B10	+3VSB
A11	BUF_PLT_ RST#	B11	WAKE#
A12	GND	B12	RESERVED
A13	PCH_ ECLK_X16_ R	B13	GND
A14	PCH_ ECLK_ X16#_R	B14	PEG_TXP0_ R
A15	GND	B15	PEG_ TXN0_R
A16	PEG_RXP0	B16	GND
A17	PEG_RXN0	B17	RESERVED
A18	SLOT_SEL0	B18	GND
A19	SLOT_SEL1	B19	PEG_TXP1_ R
A20	SLOT_SEL2	B20	PEG_ TXN1_R
A21	PEG_RXP1	B21	GND
A22	PEG_RXN1	B22	GND
A23	GND	B23	PEG_TXP2_ R
A24	GND	B24	PEG_ TXN2_R
A25	PEG_RXP2	B25	GND
A26	PEG_RXN2	B26	GND
A27	GND	B27	PEG_TXP3_ R
A28	GND	B28	PEG_ TXN3_R
A29	PEG_RXP3	B29	GND
A30	PEG_RXN3	B30	CFG_X8
A31	GND	B31	RESERVED
A32	SLOT_SEL1	B32	GND
A33	SLOT_SEL2	B33	PEG_TXP4_ R
A34	GND	B34	PEG_ TXN4_R
A35	PEG_RXP4	B35	GND
A36	PEG_RXN4	B36	GND

A37	GND	B37	PEG_TXP5_R
A38	GND	B38	PEG_TXN5_R
A39	PEG_RXP5	B39	GND
A40	PEG_RXN5	B40	GND
A41	GND	B41	PEG_TXP6_R
A42	GND	B42	PEG_TXN6_R
A43	PEG_RXP6	B43	GND
A44	PEG_RXN6	B44	GND
A45	GND	B45	PEG_TXP7_R
A46	GND	B46	PEG_TXN7_R
A47	PEG_RXP7	B47	GND
A48	PEG_RXN7	B48	X8_CLKREQ#
A49	GND	B49	GND
A50	SLOT_SEL3	B50	PEG_TXP8_R
A51	GND	B51	PEG_TXN8_R
A52	PEG_RXP8	B52	GND
A53	PEG_RXN8	B53	GND
A54	GND	B54	PEG_TXP9_R
A55	GND	B55	PEG_TXN9_R
A56	PEG_RXP9	B56	GND
A57	PEG_RXN9	B57	GND
A58	GND	B58	PEG_TXP10_R
A59	GND	B59	PEG_TXN10_R
A60	PEG_RXP10	B60	GND
A61	PEG_RXN10	B61	GND
A62	GND	B62	PEG_TXP11_R
A63	GND	B63	PEG_TXN11_R
A64	PEG_RXP11	B64	GND
A65	PEG_RXN11	B65	GND
A66	GND	B66	PEG_TXP12_R
A67	GND	B67	PEG_TXN12_R
A68	PEG_RXP12	B68	GND
A69	PEG_RXN12	B69	GND
A70	GND	B70	PEG_TXP13_R
A71	GND	B71	PEG_TXN13_R
A72	PEG_RXP13	B72	GND
A73	PEG_RXN13	B73	GND
A74	GND	B74	PEG_TXP14_R
A75	GND	B75	PEG_TXN14_R
A76	PEG_RXP14	B76	GND
A77	PEG_RXN14	B77	GND
A78	GND	B78	PEG_TXP15_R
A79	GND	B79	PEG_TXN15_R
A80	PEG_RXP15	B80	GND
A81	PEG_RXN15	B81	+5VSB
A82	GND	B82	+5VSB

10 : PCIE2

Pin	Signal Name	Pin	Signal Name
A1	GND	B1	+12V
A2	+12V	B2	+12V
A3	+12V	B3	+12V
A4	GND	B4	GND
A5	PCH_ECLK_X4_2	B5	SMB_CLK_MAIN
A6	PCH_ECLK_X4_2#	B6	SMB_DATA_MAIN
A7	RESERVED	B7	GND
A8	RESERVED	B8	+3V
A9	+3V	B9	SIO_PME#
A10	+3V	B10	+3VSB
A11	BUF_PLT_RST#	B11	WAKE#
A12	GND	B12	RESERVED
A13	PCH_ECLK_X4_1	B13	GND
A14	PCH_ECLK_X4_1#	B14	PCH_PE_TXP1_C
A15	GND	B15	PCH_PE_TXP2_C
A16	PCH_PE_RXP1	B16	GND
A17	PCH_PE_RXN1	B17	RESERVED
A18	GND	B18	GND
A19	RESERVED	B19	PCH_PE_TXP2_C
A20	GND	B20	PCH_PE_TXN2_C
A21	PCH_PE_RXP2	B21	GND
A22	PCH_PE_RXN2	B22	GND
A23	GND	B23	PCH_PE_TXP3_C
A24	GND	B24	PCH_PE_TXN3_C

A25	PCH_PE_ RXP3	B25	GND
A26	PCH_PE_ RXN3	B26	GND
A27	GND	B27	PCH_PE_ TXP4_C
A28	GND	B28	PCH_PE_ TXN4_C
A29	PCH_PE_ RXP4	B29	GND
A30	PCH_PE_ RXN4	B30	RESERVED
A31	GND	B31	X4_ PRSENT#_1
A32	RESERVED	B32	GND
A33	RESERVED	B33	PCIE_4_ TXP21_C
A34	GND	B34	PCIE_4_ TXN21_C
A35	PCIE_4_ RXP21	B35	GND
A36	PCIE_4_ RXN21	B36	GND
A37	GND	B37	PCIE_4_ TXP22_C
A38	GND	B38	PCIE_4_ TXN22_C
A39	PCIE_4_ RXP22	B39	GND
A40	PCIE_4_ RXN22	B40	GND
A41	GND	B41	PCIE_4_ TXP23_C
A42	GND	B42	PCIE_4_ TXN23_C
A43	PCIE_4_ RXP23	B43	GND
A44	PCIE_4_ RXN23	B44	GND
A45	GND	B45	PCIE_4_ TXP24_C
A46	GND	B46	PCIE_4_ TXN24_C
A47	PCIE_4_ RXP24	B47	GND
A48	PCIE_4_ RXN24	B48	X4_ PRSENT#_2
A49	GND	B49	GND

11 : M.2 Key-M Socket (M2_M1)

Pin	Signal Name	Pin	Signal Name
1	GND	2	+3.3V
3	GND	4	+3.3V
5	PERn3	6	NA
7	PERp3	8	NA
9	GND	10	SATA_LED
11	PETn3	12	+3.3V
13	PETp3	14	+3.3V
15	GND	16	+3.3V
17	PERn2	18	+3.3V
19	PERp2	20	NA
21	GND	22	NA
23	PETn2	24	NA
25	PETp2	26	NA
27	GND	28	NA
29	PERn1	30	NA
31	PERp1	32	NA
33	GND	34	NA
35	PETn1	36	NA
37	PETp1	38	NA
39	GND	40	SMB_CLK
41	PERn0	42	SMB_DATA
43	PERp0	44	NA
45	GND	46	NA
47	PETn0	48	NA
49	PETP0	50	PERST#
51	GND	52	CLKREQ#
53	PEFCLKn	54	WAKE#
55	PEFCLKp	56	NA
57	GND	58	NA
67	NA	68	NA
69	PEDET	70	+3.3V
71	GND	72	+3.3V
73	GND	74	+3.3V
75	GND		

12 : VGA-PWR600W

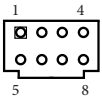

Pin	Signal Name	Pin	Signal Name
1	V-	2	V-
3	V-	4	V-
5	GND	6	GND
7	GND	8	GND

13 : DC Input Connector (DC_IN1)

14 : Top : RJ45 LAN Port (LAN1)
(Supports vPro)
Middle/Bottom : USB 3.2 Gen2 Ports
(USB3_1_2)

15 : Top : RJ45 LAN Port (LAN2)
Middle/Bottom : USB 3.2 Gen2 Ports
(USB3_3_4)

16 : Top : RJ45 LAN Port (LAN3)

Middle/Bottom : USB 3.2 Gen2 Ports (USB_7_8)

17 : Top : D-Sub Port (VGA1)

Bottom Right : REMOTE_IGN_CON1

Bottom Left : IGN Mode Select

18 : Top : DislpayPort (DP1)

Bottom : HDMI Port (HDMI1)

19 : Audio Jacks

Top : Green - Line Out

Bottom : Pink - Mic In

20 : Front Panel Audio Header (HD_AUDIO1)

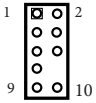

Pin	Signal Name	Pin	Signal Name
1	MIC2_L	2	GND
3	MIC2_R	4	NA
5	OUT2_R	6	MIC_RET
7	J_SENSE	8	
9	OUT2_L	10	OUT_RET

This is an interface for front panel audio cable that allows convenient connection and control of audio devices.

21 : SPDIF Header (SPDIF1)

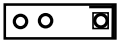

Pin	Signal Name
1	+5V
2	
3	SPDIF OUT
4	GND

SPDIF header, providing SPDIF audio output to HDMI VGA card, allows the system to connect HDMI Digital TV/projector/LCD devices. Please connect the SPDIF connector of HDMI VGA card to this header.

22 : POE Power Connector (PWR_POE1)

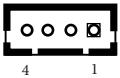

Pin	Signal Name
1	+12V
2	+12V
3	GND
4	+3VSB

23 : 3W Audio AMP Output Wafer (SPEAKER1)

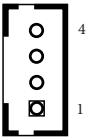

Pin	Signal Name
1	OUTLN
2	OUTLP
3	OUTRP
4	OUTRN

24 : POE_CON1

Pin	Signal Name	Pin	Signal Name
1	BUF_PLT_RST#	26	GND
2	WAKE#	27	POE1_CLKREQ#
3	GND	28	POE2_CLKREQ#
4	GND	29	GND
5	SMB_POE_CLK	30	POE_SEL0
6	SMB_POE_DATA	31	POE_SEL1
7	GND	32	GND
8	GND	33	RESERVED
9	POE1_CLKP_R	34	RESERVED
10	POE1_CLKN_R	35	RESERVED

11	GND	36	RESERVED
12	PCH_POE1_RXP	37	RESERVED
13	PCH_POE1_RXN	38	RESERVED
14	GND	39	RESERVED
15	PCH_POE1_TXP	40	RESERVED
16	PCH_POE1_TXN	41	RESERVED
17	GND	42	RESERVED
18	PCH_POE2_TXP	43	POE1_DISABLE_N
19	PCH_POE2_TXn	44	POE2_DISABLE_N
20	GND	45	RESERVED
21	PCH_POE2_RXP	46	RESERVED
22	PCH_POE2_RXN	47	RESERVED
23	GND	48	RESERVED
24	POE2_CLKP	49	RESERVED
25	POE2_CLKN	50	RESERVED

*Supported by DSC-POE Card.

25 : M.2 Key-B Socket (M2_B2)

Pin	Signal Name	Pin	Signal Name
1	NA	2	+3.3V
3	GND	4	+3.3V
5	GND	6	FuLL_Card_Power_off
7	USB_D+	8	W_DISABLE
9	USB_D-	10	WWAN_LED#
11	GND		
21	GND	20	NA
23	NA	22	NA
25	NA	24	NA
27	GND	26	NA
29	USB3_RX-	28	NA
31	USB3_RX+	30	UIM_RESET
33	GND	32	UIM_CLK
35	USB3_TX-	34	UIM_DATA
37	USB3_TX+	36	UIM_PWR
39	GND	38	NA
41	PERn0	40	NA
43	PERP0	42	NA
45	GND	44	NA
47	PETn0	46	NA
49	PETP0	48	NA
51	GND	50	PERST#
53	PEFCLKn	52	CLKREQ#
55	PEFCLKp	54	WAKE#
57	GND	56	NA
59	NA	58	NA
61	NA	60	NA
63	NA	62	NA
65	NA	64	NA
67	NA	66	NA
69	NA	68	NA
71	GND	70	+3.3V
73	GND	72	+3.3V
75	NA	74	+3.3V

26 : M.2 Key-E Socket (M2_E1)

Pin	Signal Name	Pin	Signal Name
1	GND	2	+3.3V
3	USB_D+	4	+3.3V
5	USB_D-	6	NA
7	GND	8	NA
9	CNV_WR_D1-	10	CNV_RF_RESET
11	CNV_WR_D1+	12	NA
13	GND	14	MODEM_CLKREQ
15	CNV_WR_D0-	16	NA
17	CNV_WR_D0+	18	GND
19	GND	20	NA
21	CNV_WR_CLK-	22	CNV_BRI_RSP
23	CNV_WR_CLK+		
		32	CNV_BGI_DT
33	GND	34	CNV_RGI_RSP
35	PETp	36	CNV_BRI_DT
37	PETn	38	NA
39	GND	40	NA
41	PERp	42	NA
43	PERn	44	NA
45	GND	46	NA
47	PEFCLKp	48	NA
49	PEFCLKn	50	SUSCLK
51	GND	52	PERST0#
53	CLKREQ#	54	W_DISABLE1#
55	WAKE#	56	W_DISABLE2#
57	GND	58	SMB_DATA
59	CNV_WT_D1-	60	SMB_CLK
61	CNV_WT_D1+	62	NA
63	GND	64	CLKIN_XTAL_LCP

65	CNV_WT_ D0-	66	NA
67	CNV_WT_ D0+	68	NA
69	GND	70	NA
71	CNV_WT_ CLK-	72	+3.3V
73	CNV_WT_ CLK+	74	+3.3V
75	GND		

27 : M.2 Key-M Socket (M2_M2)

Pin	Signal Name	Pin	Signal Name
1	GND	2	+3.3V
3	GND	4	+3.3V
5	PERn3	6	NA
7	PERp3	8	NA
9	GND	10	SATA_LED
11	PETn3	12	+3.3V
13	PETp3	14	+3.3V
15	GND	16	+3.3V
17	PERn2	18	+3.3V
19	PERp2	20	NA
21	GND	22	NA
23	PETn2	24	NA
25	PETp2	26	NA
27	GND	28	NA
29	PERn1	30	NA
31	PERp1	32	NA
33	GND	34	NA
35	PETn1	36	NA
37	PETp1	38	NA
39	GND	40	SMB_CLK
41	PERn0	42	SMB_DATA
43	PERp0	44	NA
45	GND	46	NA
47	PETn0	48	NA
49	PETP0	50	PERST#
51	GND	52	CLKREQ#
53	PEFCLKn	54	WAKE#
55	PEFCLKp	56	NA
57	GND	58	NA
67	NA	68	NA
69	PEDET	70	+3.3V
71	GND	72	+3.3V
73	GND	74	+3.3V
75	GND		

28 : MCU_CON1

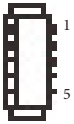

Pin	Signal Name
1	+MCU_VDD
2	ICE_DATA
3	ICE_CLK
4	MCU_RESET#
5	GND

29 : HEADER1

1-2 : Clear CMOS2*
3-4 : SI AT Mode
5-6 : CI1
Open : Normal
Short : Active Case Open

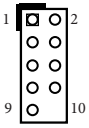

*Note:
CLRMOS2 allows you to clear the data in CMOS automatically when AC power on. The data in CMOS includes system setup information such as system password, date, time, and system setup parameters. To clear and reset the system parameters to default setup, please turn off the computer and unplug the power cord, and then use a jumper cap to short the pins on CLRMOS2.

30 : IGN_POWER1

Open : Normal (Default)
Short : IGN

31 : COM Port Headers (COM5, 6)

(RS232/422/485)

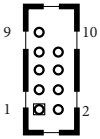

* This motherboard supports RS232/422/485 on COM5, 6 ports. Please refer to below table for the pin definition. In addition, COM5, 6 port (RS232/422/485) can be adjusted in BIOS setup utility > Advanced Screen > Super IO Configuration. You may refer to our user manual for details.

COM5, 6 Ports Pin Definition

Pin	RS232	RS422	RS485
1	DCD	TX-	RTX-
2	RXD	TX+	RTX+
3	TXD	RX+	NA
4	DTR	RX-	NA
5	GND	GND	GND
6	DSR	NA	NA
7	RTS	NA	NA
8	CTS	NA	NA
9	NA	NA	NA

32 : Chassis FAN Connector (+12V)
(CHA_FAN1)

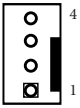

Pin	Signal Name
1	GND
2	+12V
3	CHA_FAN_SPEED
4	FAN_SPEED_CONTROL

The board offers three 4-pin chassis fan (Smart Fan) connectors which are compatible with 3-pin chassis fan. If you connect a 3-pin chassis fan to the chassis fan connector on this motherboard, please connect it to pin 1-3. The maximum current is 1A.

33 : SMBUS_TEST1

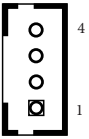

Pin	Signal Name
1	SMBUS_TEST
2	SMB_CLK
3	SMB_DATA
4	GND

34 : System Panel Header (PANEL1)

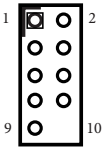

Pin	Signal Name	Pin	Signal Name
1	HDLED+	2	PLED+
3	HDLED-	4	PLED-
5	GND	6	PWRBTN#
7	RESET#	8	GND
9	GND	10	

This header accommodates several system front panel functions.

Connect the power switch, reset switch and system status indicator on the chassis to this header according to the pin assignments below. Note the positive and negative pins before connecting the cables.

PWRBTN (Power Switch):
Connect to the power switch on the chassis front panel. You may configure the way to turn off your system using the power switch.
RESET (Reset Switch):
Connect to the reset switch on the chassis front panel. Press the reset switch to restart the computer if the computer freezes and fails to perform a normal restart.
PLED (System Power LED):
Connect to the power status indicator on the chassis front panel. The LED is on when the system is operating. The LED keeps blinking when the system is in S1 sleep state. The LED is off when the system is in S3/S4 sleep state or powered off (S5).
HDLED (Hard Drive Activity LED):
Connect to the hard drive activity LED on the chassis front panel. The LED is on when the hard drive is reading or writing data.

The front panel design may differ by chassis. A front panel module mainly consists of power switch, reset switch, power LED, hard drive activity LED, speaker and etc. When connecting your chassis front panel module to this header, make sure the wire assignments and the pin assignments are matched correctly.

35 : PCIE_ISOLATION

Pin	Signal Name
1	PSON#
2	GND

36 : PCIE12V_CON1

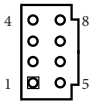

Pin	Signal Name	Pin	Signal Name
1	+12V	2	+12V
3	+12V	4	GND
5	GND	6	GND
7	GND	8	GND

37 : ESPI Header (ESPI1)

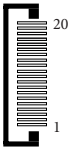

Pin	Signal Name
1	GND
2	C_ESPI_CLK
3	GND
4	C_ESPI_CS#
5	DEBUG_RESET
6	GND
7	+3V
8	GND
9	SMB_CLK_MAIN
10	SMB_DATA_MAIN
11	C_ESPI_IO0
12	C_ESPI_IO1
13	C_ESPI_IO2
14	C_ESPI_IO3
15	GND
16	+3VSB
17	NA
18	NA
19	C_ESPI_ALERT#
20	GND

Backside

38 : DIO9_15

Pin	Signal Name
1	DO_9
2	DI_9
3	DO_10
4	DI_10
5	DO_11
6	DI_11
7	DO_12
8	DI_12
9	DO_13
10	DI_13
11	DO_14
12	DI_14
13	DUMMY
14	NC
15	DO_15
16	DI_15
17	DO_16
18	DI_16

39 : COMDIO_CON1

Pin	Signal Name	Pin	Signal Name
1	RTS#1	41	USB2_COM_DIO_EN
2	DTR#1	42	GPP_F23
3	TXD1	43	GPP_F22
4	RXD1	44	GPP_F18
5	RI#1	45	GPP_F17
6	DSR#1	46	GPP_F16
7	DCD#1	47	GPP_F7
8	CTS#1	48	GPP_F2
9	GND	49	GPP_F1
10	RTS#2	50	GND
11	DTR#2	51	GPP_K1
12	TXD2	52	GPP_K0
13	RXD2	53	GPP_H23
14	RI#2	54	GPP_I10_3V
15	DSR#2	55	GPP_I0_3V
16	DCD#2	56	GPP_E4
17	CTS#2	57	GPP_E2
18	GND	58	GPP_B20
19	RTS#3	59	GND
20	DTR#3	60	P-6
21	TXD3	61	P+6
22	RXD3	62	GND
23	RI#3	63	TERM_1
24	DSR#3	64	SLEW_1

25	DCD#3	65	RS422_ FIX_1
26	CTS#3	66	MODE1_1
27	RTS#4	67	MODE0_1
28	DTR#4	68	TERM_2
29	TXD4	69	SLEW_2
30	RXD4	70	RS422_ FIX_2
31	RI#4	71	MODE1_2
32	DSR#4	72	MODE0_2
33	DCD#4	73	SIO_PSIN#
34	CTS#4	74	RTCRST#
35	+3V	75	COMDIO_ SEL0
36	+3V	76	COMDIO_ SEL1
37	PLED-	77	DELAY_ PWR_CTRL
38	PLED+	78	COMDIO_ SEL2
39	+5V	79	+5VSB
40	+5V	80	+5VSB

* Supported by DSC-COMDIO Card.

2.4.2 Motherboard Layout for iEP(F)-9032 Series/iEP(F)-9042 Series

Top Side

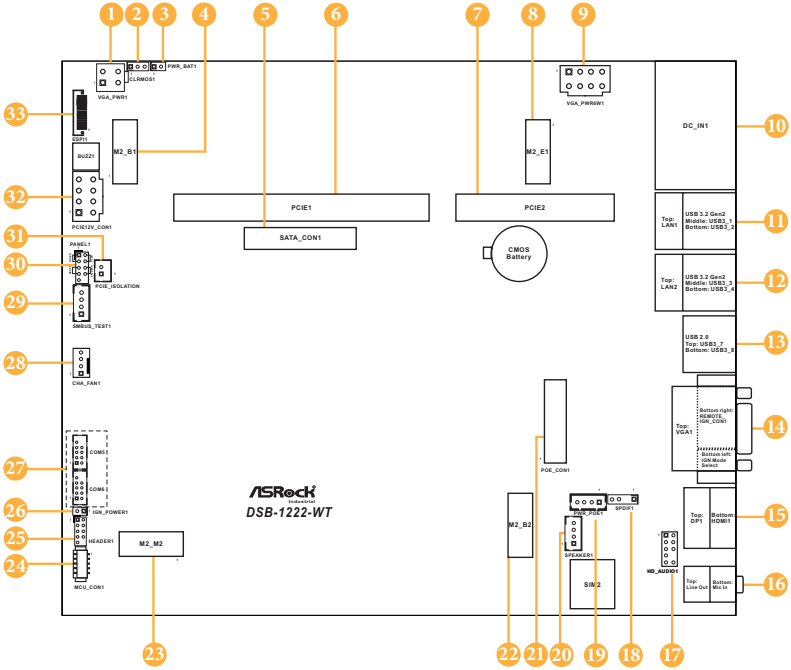

Bottom Side

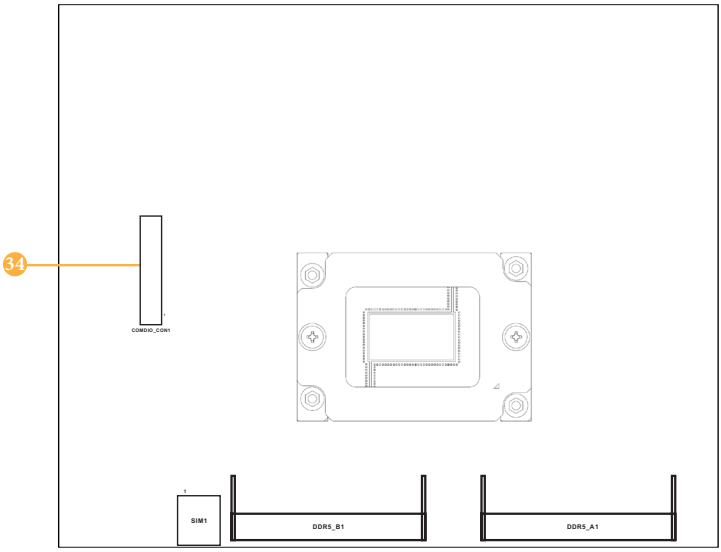

1 : 4-Pin 12V ATX Power Connector (VGA_PWR1)

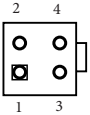

Pin	Signal Name
1	GND
2	GND
3	DC Input
4	DC Input

Please connect a DC +9V~+36V power supply to this connector.

2 : Clear CMOS Header (CLRMOS1)

1-2 : Normal (Default)
2-3 : Clear CMOS

NOTE: CLRMOS1 allows you to clear the data in CMOS. To clear and reset the system parameters to default setup, please turn off the computer and unplug the power cord from the power supply. After waiting for 15 seconds, use a jumper cap to short pin2 and pin3 on CLRMOS1 for 5 seconds. However, please do not clear the CMOS right after you update the BIOS. If you need to clear the CMOS when you just finished updating the BIOS, you must boot up the system first, and then shut it down before you do the clear-CMOS action. Please be noted that the password, date, time, user default profile will be cleared only if the CMOS battery is removed.

3 : PWR_BAT1

Open : Normal (Default)
Short : Charge Battery*

*Only supported by chargeable battery.

4 : M.2 Key-B Socket (M2_B1)

Pin	Signal Name	Pin	Signal Name
1	NA	2	+3.3V
3	GND	4	+3.3V
5	GND	6	FuLL_Card_ Power_off
7	USB_D+	8	W_DISABLE
9	USB_D-	10	WWAN_ LED#
11	GND		
21	GND	20	NA
23	NA	22	NA
25	NA	24	NA
27	GND	26	NA
29	USB3_RX-	28	NA
31	USB3_RX+	30	UIM_RESET
33	GND	32	UIM_CLK
35	USB3_TX-	34	UIM_DATA
37	USB3_TX+	36	UIM_PWR
39	GND	38	NA
41	PERn0	40	NA
43	PERP0	42	NA
45	GND	44	NA
47	PETn0	46	NA
49	PETP0	48	NA
51	GND	50	PERST#
53	PEFCLKn	52	CLKREQ#
55	PEFCLKp	54	WAKE#
57	GND	56	NA
59	NA	58	NA
61	NA	60	NA
63	NA	62	NA
65	NA	64	NA
67	NA	66	NA
69	NA	68	NA
71	GND	70	+3.3V
73	GND	72	+3.3V
75	NA	74	+3.3V

5 : SATA Connector (SATA_CON1)

Pin	Signal Name	Pin	Signal Name
A1	GND	B1	+5V
A2	+5V	B2	+5V
A3	+5V	B3	+5V
A4	GND	B4	GND
A5	RESERVED	B5	SMB_CLK_ MAIN
A6	RESERVED	B6	SMB_DATA_ MAIN
A7	RESERVED	B7	GND
A8	RESERVED	B8	+3V
A9	+3V	B9	RESERVED
A10	+3V	B10	RESERVED
A11	RESERVED	B11	RESERVED
A12	SATA_SEL1	B12	RESERVED
A13	RESERVED	B13	GND
A14	RESERVED	B14	PCH_ SATA4_TXP_ C
A15	CFAST_ SEL1	B15	PCH_ SATA4_ TXN_C
A16	PCH_ SATA4_ RXP_C	B16	GND

A17	PCH_ SATA4_ RXN_C	B17	RESERVED
A18	GND	B18	GND
A19	SATA_SEL2	B19	PCH_ SATA5_TXP_ C
A20	GND	B20	PCH_ SATA5_ TXN_C
A21	PCH_ SATA5_ RXP_C	B21	GND
A22	PCH_ SATA5_ RXN_C	B22	GND
A23	GND	B23	PCH_ SATA6_TXP_ C
A24	GND	B24	PCH_ SATA6_ TXN_C
A25	PCH_ SATA6_ RXP_C	B25	GND
A26	PCH_ SATA6_ RXN_C	B26	GND
A27	GND	B27	PCH_ SATA7_TXP_ C
A28	GND	B28	PCH_ SATA7_ TXN_C
A29	PCH_ SATA7_ RXP_C	B29	GND
A30	PCH_ SATA7_ RXN_C	B30	RESERVED
A31	GND	B31	RESERVED
A32	RESERVED	B32	GND

*supported by DSC-SATA Card.

6 : PCIE1

Pin	Signal Name	Pin	Signal Name
A1	GND	B1	+12V
A2	+12V	B2	+12V
A3	+12V	B3	+12V
A4	X16_ CLKREQ#_ R	B4	GND
A5	PCH_ ECLK_X8	B5	SMB_CLK_ MAIN
A6	PCH_ ECLK_X8#	B6	SMB_ MAIN_ MAIN
A7	SMB_CLK	B7	GND
A8	SMB_DATA	B8	+3V
A9	+3V	B9	RESERVED
A10	+3V	B10	+3VSB
A11	BUF_PLT_ RST#	B11	WAKE#
A12	GND	B12	RESERVED
A13	PCH_ ECLK_X16_ R	B13	GND
A14	PCH_ ECLK_ X16#_R	B14	PEG_TXP0_ R
A15	GND	B15	PEG_ TXN0_R
A16	PEG_RXP0	B16	GND
A17	PEG_RXN0	B17	RESERVED
A18	SLOT_SEL0	B18	GND
A19	SLOT_SEL1	B19	PEG_TXP1_ R
A20	SLOT_SEL2	B20	PEG_ TXN1_R
A21	PEG_RXP1	B21	GND
A22	PEG_RXN1	B22	GND
A23	GND	B23	PEG_TXP2_ R
A24	GND	B24	PEG_ TXN2_R
A25	PEG_RXP2	B25	GND
A26	PEG_RXN2	B26	GND
A27	GND	B27	PEG_TXP3_ R
A28	GND	B28	PEG_ TXN3_R
A29	PEG_RXP3	B29	GND
A30	PEG_RXN3	B30	CFG_X8
A31	GND	B31	RESERVED
A32	SLOT_SEL1	B32	GND
A33	SLOT_SEL2	B33	PEG_TXP4_ R
A34	GND	B34	PEG_ TXN4_R
A35	PEG_RXP4	B35	GND
A36	PEG_RXN4	B36	GND
A37	GND	B37	PEG_TXP5_ R
A38	GND	B38	PEG_ TXN5_R
A39	PEG_RXP5	B39	GND
A40	PEG_RXN5	B40	GND
A41	GND	B41	PEG_TXP6_ R
A42	GND	B42	PEG_ TXN6_R
A43	PEG_RXP6	B43	GND

A44	PEG_RXN6	B44	GND
A45	GND	B45	PEG_TXP7_R
A46	GND	B46	PEG_TXN7_R
A47	PEG_RXP7	B47	GND
A48	PEG_RXN7	B48	X8_CLKREQ#
A49	GND	B49	GND
A50	SLOT_SEL3	B50	PEG_TXP8_R
A51	GND	B51	PEG_TXN8_R
A52	PEG_RXP8	B52	GND
A53	PEG_RXN8	B53	GND
A54	GND	B54	PEG_TXP9_R
A55	GND	B55	PEG_TXN9_R
A56	PEG_RXP9	B56	GND
A57	PEG_RXN9	B57	GND
A58	GND	B58	PEG_TXP10_R
A59	GND	B59	PEG_TXN10_R
A60	PEG_RXP10	B60	GND
A61	PEG_RXN10	B61	GND
A62	GND	B62	PEG_TXP11_R
A63	GND	B63	PEG_TXN11_R
A64	PEG_RXP11	B64	GND
A65	PEG_RXN11	B65	GND
A66	GND	B66	PEG_TXP12_R
A67	GND	B67	PEG_TXN12_R
A68	PEG_RXP12	B68	GND
A69	PEG_RXN12	B69	GND
A70	GND	B70	PEG_TXP13_R
A71	GND	B71	PEG_TXN13_R
A72	PEG_RXP13	B72	GND
A73	PEG_RXN13	B73	GND
A74	GND	B74	PEG_TXP14_R
A75	GND	B75	PEG_TXN14_R
A76	PEG_RXP14	B76	GND
A77	PEG_RXN14	B77	GND
A78	GND	B78	PEG_TXP15_R
A79	GND	B79	PEG_TXN15_R
A80	PEG_RXP15	B80	GND
A81	PEG_RXN15	B81	+5VSB
A82	GND	B82	+5VSB

7 : PCIE2

Pin	Signal Name	Pin	Signal Name
A1	GND	B1	+12V
A2	+12V	B2	+12V
A3	+12V	B3	+12V
A4	GND	B4	GND
A5	PCH_ECLK_X4_2	B5	SMB_CLK_MAIN
A6	PCH_ECLK_X4_2#	B6	SMB_DATA_MAIN
A7	RESERVED	B7	GND
A8	RESERVED	B8	+3V
A9	+3V	B9	SIO_PME#
A10	+3V	B10	+3VSB
A11	BUF_PLT_RST#	B11	WAKE#
A12	GND	B12	RESERVED
A13	PCH_ECLK_X4_1	B13	GND
A14	PCH_ECLK_X4_1#	B14	PCH_PE_TXP1_C
A15	GND	B15	PCH_PE_TXP2_C
A16	PCH_PE_RXP1	B16	GND
A17	PCH_PE_RXN1	B17	RESERVED
A18	GND	B18	GND
A19	RESERVED	B19	PCH_PE_TXP2_C
A20	GND	B20	PCH_PE_TXN2_C
A21	PCH_PE_RXP2	B21	GND
A22	PCH_PE_RXN2	B22	GND
A23	GND	B23	PCH_PE_TXP3_C
A24	GND	B24	PCH_PE_TXN3_C
A25	PCH_PE_RXP3	B25	GND
A26	PCH_PE_RXN3	B26	GND
A27	GND	B27	PCH_PE_TXP4_C
A28	GND	B28	PCH_PE_TXN4_C
A29	PCH_PE_RXP4	B29	GND
A30	PCH_PE_RXN4	B30	RESERVED
A31	GND	B31	X4_PRSENT#_1
A32	RESERVED	B32	GND

A33	RESERVED	B33	PCIE_4_ TXP21_C
A34	GND	B34	PCIE_4_ TXN21_C
A35	PCIE_4_ RXP21	B35	GND
A36	PCIE_4_ RXN21	B36	GND
A37	GND	B37	PCIE_4_ TXP22_C
A38	GND	B38	PCIE_4_ TXN22_C
A39	PCIE_4_ RXP22	B39	GND
A40	PCIE_4_ RXN22	B40	GND
A41	GND	B41	PCIE_4_ TXP23_C
A42	GND	B42	PCIE_4_ TXN23_C
A43	PCIE_4_ RXP23	B43	GND
A44	PCIE_4_ RXN23	B44	GND
A45	GND	B45	PCIE_4_ TXP24_C
A46	GND	B46	PCIE_4_ TXN24_C
A47	PCIE_4_ RXP24	B47	GND
A48	PCIE_4_ RXN24	B48	X4_ PRSENT#_2
A49	GND	B49	GND

8 : M.2 Key-E Socket (M2_E1)

Pin	Signal Name	Pin	Signal Name
1	GND	2	+3.3V
3	USB_D+	4	+3.3V
5	USB_D-	6	NA
7	GND	8	NA
9	CNV_WR_ D1-	10	CNV_RF_ RESET
11	CNV_WR_ D1+	12	NA
13	GND	14	MODEM_ CLKREQ
15	CNV_WR_ D0-	16	NA
17	CNV_WR_ D0+	18	GND
19	GND	20	NA
21	CNV_WR_ CLK-	22	CNV_BRI_ RSP
23	CNV_WR_ CLK+		
		32	CNV_BGI_ DT
33	GND	34	CNV_RGI_ RSP
35	PETp	36	CNV_BRI_ DT
37	PETn	38	NA
39	GND	40	NA
41	PERp	42	NA
43	PERn	44	NA
45	GND	46	NA
47	PEFCLKp	48	NA
49	PEFCLKn	50	SUSCLK
51	GND	52	PERST0#
53	CLKREQ#	54	W_ DISABLE1#
55	WAKE#	56	W_ DISABLE2#
57	GND	58	SMB_DATA
59	CNV_WT_ D1-	60	SMB_CLK
61	CNV_WT_ D1+	62	NA
63	GND	64	CLKIN_ XTAL_LCP
65	CNV_WT_ D0-	66	NA
67	CNV_WT_ D0+	68	NA
69	GND	70	NA
71	CNV_WT_ CLK-	72	+3.3V
73	CNV_WT_ CLK+	74	+3.3V
75	GND		

9 : VGA-PWR600W

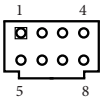

Pin	Signal Name	Pin	Signal Name
1	V-	2	V-
3	V-	4	V-
5	GND	6	GND
7	GND	8	GND

10 : DC Input Connector (DC_IN1)

11 : Top : RJ45 LAN Port (LAN1)

(Supports vPro)

Middle/Bottom : USB 3.2 Gen2 Ports

(USB3_1_2)

12 : Top : RJ45 LAN Port (LAN2)

Middle/Bottom : USB 3.2 Gen2 Ports (USB3_3_4)

13 : USB 2.0 Ports

Top : USB3_7

Bottom : USB3_8

14 : Top : D-Sub Port (VGA1)

Bottom Right : REMOTE_IGN_CON1

Bottom Left : IGN Mode Select

15 : Top : DislpayPort (DP1)

Bottom : HDMI Port (HDMI1)

16 : Audio Jacks

Top : Green - Line Out

Bottom : Pink - Mic In

17 : Front Panel Audio Header (HD_AUDIO1)

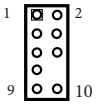

Pin	Signal Name	Pin	Signal Name
1	MIC2_L	2	GND
3	MIC2_R	4	NA
5	OUT2_R	6	MIC_RET
7	J_SENSE	8	
9	OUT2_L	10	OUT_RET

This is line out/microphone interface for front panel audio cable that allows jack detection, convenient connection and control of audio devices.

18 : SPDIF Header (SPDIF1)

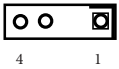

Pin	Signal Name
1	+5V
2	
3	SPDIF OUT
4	GND

SPDIF header, providing SPDIF audio output to HDMI VGA card, allows the system to connect HDMI Digital TV/projector/LCD devices. Please connect the SPDIF connector of HDMI VGA card to this header.

19 : POE Power Connector (PWR_POE1)

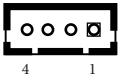

Pin	Signal Name
1	+12V
2	+12V
3	GND
4	+3VSB

20 : 3W Audio AMP Output Wafer (SPEAKER1)

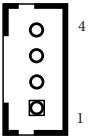

Pin	Signal Name
1	OUTLN
2	OUTLP
3	OUTRP
4	OUTRN

21 : POE_CON1

Pin	Signal Name	Pin	Signal Name
1	BUF_PLT_RST#	26	GND
2	WAKE#	27	POE1_CLKREQ#
3	GND	28	POE2_CLKREQ#
4	GND	29	GND
5	SMB_POE_CLK	30	POE_SEL0
6	SMB_POE_DATA	31	POE_SEL1

7	GND	32	GND
8	GND	33	RESERVED
9	POE1_ CLKP_R	34	RESERVED
10	POE1_ CLKN_R	35	RESERVED
11	GND	36	RESERVED
12	PCH_POE1_ RXP	37	RESERVED
13	PCH_POE1_ RXN	38	RESERVED
14	GND	39	RESERVED
15	PCH_POE1_ TXP	40	RESERVED
16	PCH_POE1_ TXN	41	RESERVED
17	GND	42	RESERVED
18	PCH_POE2_ TXP	43	POE1_ DISABLE_N
19	PCH_POE2_ TXn	44	POE2_ DISABLE_N
20	GND	45	RESERVED
21	PCH_ POE2_RXP	46	RESERVED
22	PCH_ POE2_RXN	47	RESERVED
23	GND	48	RESERVED
24	POE2_CLKP	49	RESERVED
25	POE2_ CLKN	50	RESERVED

*Supported by DSC-POE Card.

22 : M.2 Key-B Socket (M2_B2)

Pin	Signal Name	Pin	Signal Name
1	NA	2	+3.3V
3	GND	4	+3.3V
5	GND	6	FuLL_Card_ Power_off
7	USB_D+	8	W_DISABLE
9	USB_D-	10	WWAN_ LED#
11	GND		
21	GND	20	NA
23	NA	22	NA
25	NA	24	NA
27	GND	26	NA
29	USB3_RX-	28	NA
31	USB3_RX+	30	UIM_RESET
33	GND	32	UIM_CLK
35	USB3_TX-	34	UIM_DATA
37	USB3_TX+	36	UIM_PWR
39	GND	38	NA
41	PERn0	40	NA
43	PERP0	42	NA
45	GND	44	NA
47	PETn0	46	NA
49	PETP0	48	NA
51	GND	50	PERST#
53	PEFCLKn	52	CLKREQ#
55	PEFCLKp	54	WAKE#
57	GND	56	NA
59	NA	58	NA
61	NA	60	NA
63	NA	62	NA
65	NA	64	NA
67	NA	66	NA
69	NA	68	NA
71	GND	70	+3.3V
73	GND	72	+3.3V
75	NA	74	+3.3V

23 : M.2 Key-M Socket (M2_M2)

Pin	Signal Name	Pin	Signal Name
1	GND	2	+3.3V
3	GND	4	+3.3V
5	NA	6	NA
7	NA	8	NA
9	GND	10	SATA_LED
11	NA	12	+3.3V
13	NA	14	+3.3V
15	GND	16	+3.3V
17	NA	18	+3.3V
19	NA	20	NA
21	GND	22	NA
23	NA	24	NA
25	NA	26	NA
27	GND	28	NA
29	NA	30	NA
31	NA	32	NA
33	GND	34	NA
35	NA	36	NA
37	NA	38	NA
39	GND	40	SMB_CLK
41	PERn0	42	SMB_DATA
43	PERp0	44	NA
45	GND	46	NA
47	PETn0	48	NA
49	PETP0	50	PERST#
51	GND	52	CLKREQ#
53	PEFCLKn	54	WAKE#
55	PEFCLKp	56	NA
57	GND	58	NA
67	NA	68	NA
69	PEDET	70	+3.3V
71	GND	72	+3.3V
73	GND	74	+3.3V
75	GND		

24 : MCU_CON1

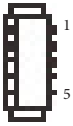

Pin	Signal Name
1	+MCU_VDD
2	ICE_DATA
3	ICE_CLK
4	MCU_RESET#
5	GND

25 : HEADER1

1-2 : Clear CMOS2*
3-4 : SI AT Mode
5-6 : CI1
Open : Normal
Short : Active Case Open

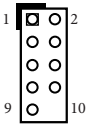

Note:
CLRMOS2 allows you to clear the data in CMOS automatically when AC power on. The data in CMOS includes system setup information such as system password, date, time, and system setup parameters. To clear and reset the system parameters to default setup, please turn off the computer and unplug the power cord, and then use a jumper cap to short the pins on CLRMOS2.

26 : IGN_POWER1

Open : Normal (Default)
Short : IGN

27 : COM Port Headers (COM5, 6)

(RS232/422/485)

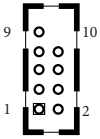

* This motherboard supports RS232/422/485 on COM5, 6 ports. Please refer to below table for the pin definition. In addition, COM5, 6 port (RS232/422/485) can be adjusted in BIOS setup utility > Advanced Screen > Super IO Configuration. You may refer to our user manual for details.

COM5, 6 Ports Pin Definition

Pin	RS232	RS422	RS485
1	DCD	TX-	RTX-
2	RXD	TX+	RTX+
3	TXD	RX+	NA
4	DTR	RX-	NA
5	GND	GND	GND
6	DSR	NA	NA
7	RTS	NA	NA
8	CTS	NA	NA
9	NA	NA	NA

28 : Chassis FAN Connector (+12V)

(CHA_FAN1)

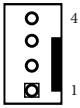

Pin	Signal Name
1	GND
2	+12V
3	CHA_FAN_SPEED
4	FAN_SPEED_CONTROL

The board offers three 4-pin chassis fan (Smart Fan) connectors which are compatible with 3-pin chassis fan. If you connect a 3-pin chassis fan to the chassis fan connector on this motherboard, please connect it to pin 1-3. The maximum current is 1A.

29 : SMBUS_TEST1

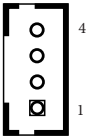

Pin	Signal Name
1	SMBUS_TEST
2	SMB_CLK
3	SMB_DATA
4	GND

30 : System Panel Header (PANEL1)

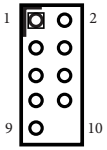

Pin	Signal Name	Pin	Signal Name
1	HDLED+	2	PLED+
3	HDLED-	4	PLED-
5	GND	6	PWRBTN#
7	RESET#	8	GND
9	GND	10	

This header accommodates several system front panel functions.

Connect the power switch, reset switch and system status indicator on the chassis to this header according to the pin assignments below. Note the positive and negative pins before connecting the cables.

PWRBTN (Power Switch):
Connect to the power switch on the chassis front panel. You may configure the way to turn off your system using the power switch.
RESET (Reset Switch):
Connect to the reset switch on the chassis front panel. Press the reset switch to restart the computer if the computer freezes and fails to perform a normal restart.
PLED (System Power LED):
Connect to the power status indicator on the chassis front panel. The LED is on when the system is operating. The LED keeps blinking when the system is in S1 sleep state. The LED is off when the system is in S3/S4 sleep state or powered off (S5).
HDLED (Hard Drive Activity LED):
Connect to the hard drive activity LED on the chassis front panel. The LED is on when the hard drive is reading or writing data.

The front panel design may differ by chassis. A front panel module mainly consists of power switch, reset switch, power LED, hard drive activity LED, speaker and etc. When connecting your chassis front panel module to this header, make sure the wire assignments and the pin assignments are matched correctly.

31 : PCIE_ISOLATION

Pin	Signal Name
1	PSON#
2	GND

32 : PCIE12V_CON1

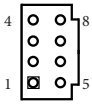

Pin	Signal Name	Pin	Signal Name
1	+12V	2	+12V
3	+12V	4	GND
5	GND	6	GND
7	GND	8	GND

33 : ESPI Header (ESPI1)

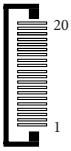

Pin	Signal Name
1	GND
2	C_ESPI_CLK
3	GND
4	C_ESPI_CS#
5	DEBUG_RESET
6	GND
7	+3V
8	GND
9	SMB_CLK_MAIN
10	SMB_DATA_MAIN
11	C_ESPI_IO0
12	C_ESPI_IO1
13	C_ESPI_IO2
14	C_ESPI_IO3
15	GND
16	+3VSB
17	NA
18	NA
19	C_ESPI_ALERT#
20	GND

Backside

34 : COMDIO_CON1

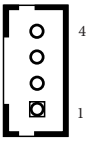

Pin	Signal Name	Pin	Signal Name
1	RTS#1	41	USB2_COM_DIO_EN
2	DTR#1	42	GPP_F23
3	TXD1	43	GPP_F22
4	RXD1	44	GPP_F18
5	RI#1	45	GPP_F17
6	DSR#1	46	GPP_F16
7	DCD#1	47	GPP_F7
8	CTS#1	48	GPP_F2
9	GND	49	GPP_F1
10	RTS#2	50	GND
11	DTR#2	51	GPP_K1
12	TXD2	52	GPP_K0
13	RXD2	53	GPP_H23
14	RI#2	54	GPP_I10_3V
15	DSR#2	55	GPP_I0_3V
16	DCD#2	56	GPP_E4
17	CTS#2	57	GPP_E2
18	GND	58	GPP_B20
19	RTS#3	59	GND
20	DTR#3	60	P-6
21	TXD3	61	P+6
22	RXD3	62	GND
23	RI#3	63	TERM_1
24	DSR#3	64	SLEW_1
25	DCD#3	65	RS422_FIX_1
26	CTS#3	66	MODE1_1
27	RTS#4	67	MODE0_1
28	DTR#4	68	TERM_2
29	TXD4	69	SLEW_2
30	RXD4	70	RS422_FIX_2
31	RI#4	71	MODE1_2
32	DSR#4	72	MODE0_2
33	DCD#4	73	SIO_PSIN#
34	CTS#4	74	RTCRST#
35	+3V	75	COMDIO_SEL0
36	+3V	76	COMDIO_SEL1
37	PLED-	77	DELAY_PWR_CTRL
38	PLED+	78	COMDIO_SEL2
39	+5V	79	+5VSB
40	+5V	80	+5VSB

* Supported by DSC-COMDIO Card.

2.4.3 Ignition Control

How to Disassemble Motherboard

For more information, refer to 3.1.

Ignition Control

The ignition power control module for in-vehicle applications is a MCU-based implementation. The iEP(F)-9030 Series/iEP(F)-9040 Series is based on mini 58. It supports features such as AT/ATX power on, and also support multiple modes for ignition and ultra-low power standby, battery-low protection, system hard-off etc.

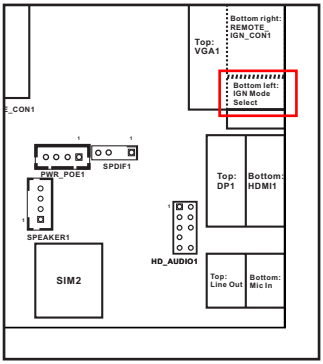

English

Ignition Control Modes

The iEP(F)-9030 Series/iEP(F)-9040 Series provides 13 modes of different power on/off and hard off delay time adjustable with rotary switch. The default switch position is set to 0 in ATX Mode.

The modes are listed as follows:

Binary	Switch Position	Mode	Power On Delay Time	Power Off Delay Time	Hard Off Delay Time	Signal
0000		0	N/A	N/A	N/A	ATX Mode
1000		1	N/A	N/A	N/A	AT Mode
0100		2	1 second	1 second	10 minutes	Ignition
1100		3	10 seconds	10 seconds	10 minutes	Ignition
0010		4	10 seconds	1 minute	10 minutes	Ignition
1010		5	10 seconds	5 minutes	10 minutes	Ignition
0110		6	30 seconds	1 minute	10 minutes	Ignition
1110		7	30 seconds	5 minutes	10 minutes	Ignition
0001		8	30 seconds	10 minutes	10 minutes	Ignition
1001		9	3 minutes	1 minutes	10 minutes	Ignition
0101		10	3 minutes	10 minutes	10 minutes	Ignition
1101		11	3 minutes	30 minutes	10 minutes	Ignition
0011		12	10 minutes	30 minutes	10 minutes	Ignition

The Policy of Ignition Power Control

The process of the ignition power control module is shown in the diagram below.

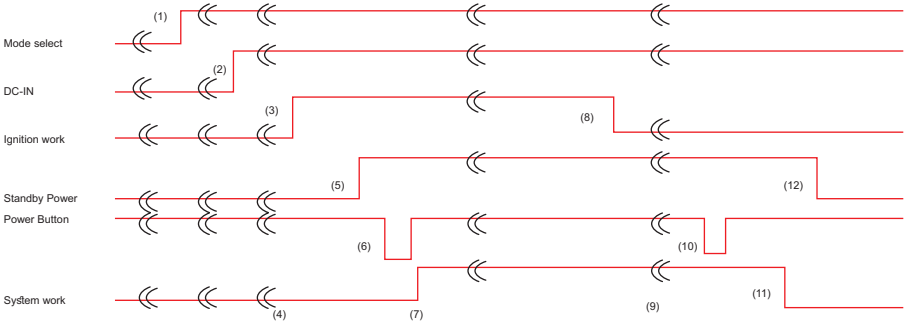

1. Select the preferred mode.
2. When the DC power is supplied to the system, MCU starts to detect the ignition signal regularly.
3. The effective value (both 12VDC and 24VDC ignition signals are acceptable).
4. MCU counts the power-on delay time depending on different modes.
5. When the power-off delay expires, MCU turns on the necessary power (+3VSB and +5VSB).
6. The power button pulse is triggered to turn on the system (known as the power button on the front panel).
7. The system starts and begins operation.
8. After a while, the ignition signal becomes inactive.
9. MCU starts to count the predefined power-off delay.
10. Once the power-off delay expires, another power button pulse will be triggered to soft-off the system (e.g., the normal shutdown process of Windows system).
11. The system is shut down completely.
12. When MCU detects the system is off, it will turn off the +3VSB and +5VSB power for the system.

2.5 Other Boards

2.5.1 DSC-SATA003-WT Layout and I/O Connectors

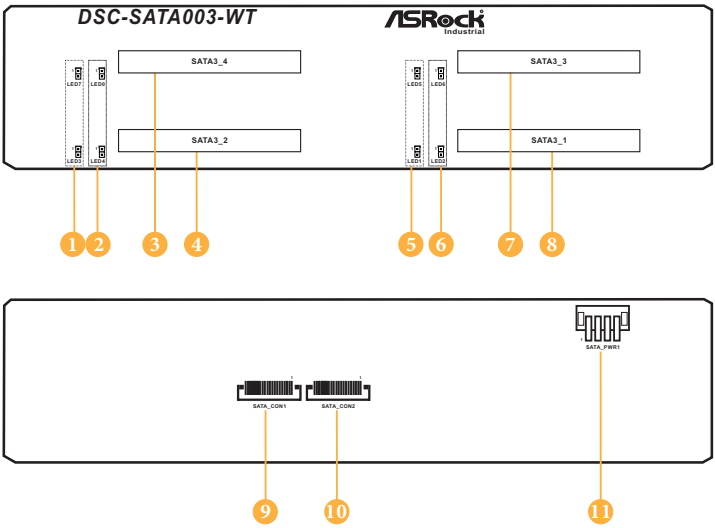

1 : PRSNT LEDS (LED7, LED3) (Device installed: Blue. No Device: N/A)

2 : ACT LEDS (LED0, LED4) (Idle: On. Data activity: Green, blinking)

3 : SATA3 Connector (SATA3_4)

4 : SATA3 Connector (SATA3_2)

5 : PRSNT LEDS (LED5, LED1) (Device installed: Blue. No Device: N/A)\

6 : ACT LEDS (LED6, LED2) (Idle: On. Data activity: Green, blinking)

7 : SATA3 Connector (SATA3_3)

8 : SATA3 Connector (SATA3_1)

9 : SATA_CON1

Pin	Signal Name
1	GND
2	SATA_TXP_0
3	SATA_TXN_0
4	GND
5	SATA_RXP_0
6	SATA_RXN_0
7	GND
8	SATA_TXP_1
9	SATA_TXN_1
10	GND
11	SATA_RXP_1
12	SATA_RXN_1
13	GND
14	NA
15	NA
16	NA
17	NA
18	SATA_SEL1
19	SATA_SEL2
20	CFAST_SEL1

10 : SATA_CON2

Pin	Signal Name
1	GND
2	SATA_TXP_2
3	SATA_TXN_2
4	GND
5	SATA_RXP_2
6	SATA_RXN_2
7	GND
8	SATA_TXP_3
9	SATA_TXN_3
10	GND
11	SATA_RXP_3
12	SATA_RXN_3
13	GND
14	NA
15	NA
16	NA
17	NA
18	NA
19	NA
20	NA

11 : SATA_PWR1

Pin	Signal Name
1	+5V
2	+5V
3	+3V
4	+3V

2.5.2 DSC-PSE002-WT Layout and I/O Connectors

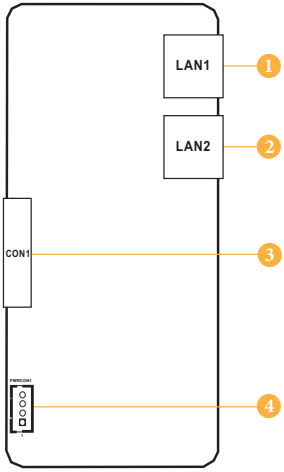

1 : LAN1 (I226IT with PSE function)

2 : LAN2 (I226IT with PSE function)

3 : CON1 (FPC Connector)

4 : PWRCON1 (Power connector)

2.5.3 DSC-PSE004-WT Layout and I/O Connectors (Optional)

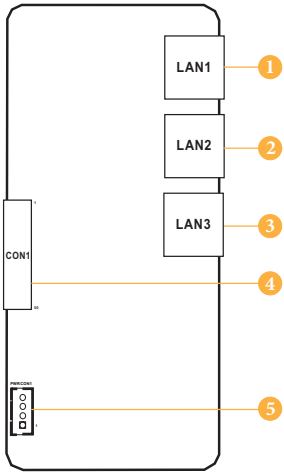

1 : LAN1 (I226IT with PSE function)

2 : LAN2 (I226IT with PSE function)

3 : LAN3 (I226IT)

4 : CON1 (FPC connector)

Pin	Signal Name
1	LAN_PWR_GOOD3
2	LAN_PWR_GOOD2
3	LAN_PWR_GOOD1
4	GND
5	UPE_CLKREQN2
6	LAN3_DISABLE_N
7	LAN2_DISABLE_N
8	LAN1_DISABLE_N
9	GND
10	UPE_CLKN2
11	UPE_CLKP2
12	GND
13	UPE_RXN2
14	UPE_RXP2
15	GND
16	UPE_TXN2
17	UPE_TXP2
18	GND
19	POE_SEL2
20	POE_SEL1

21	POE_SEL0
22	GND
23	UPE_CLKREQN1
24	UPE_CLKREQN0
25	GND
26	UPE_CLKN1
27	UPE_CLKP1
28	GND
29	UPE_RXN1
30	UPE_RXP1
31	GND
32	UPE_TXN1
33	UPE_TXP1
34	GND
35	UPE_TXN0
36	UPE_TXP0
37	GND
38	UPE_RXN0
39	UPE_RXP0
40	GND
41	UPE_CLKN0
42	UPE_CLKP0
43	GND
44	GND
45	SMB_DATA
46	SMB_CLK
47	GND
48	GND
49	WAKE#
50	BUF_PLT_RST#

5. PWRCON1 (Power connector)

Pin	Signal Name
1	+12V
2	+12V
3	GND
4	+3VSB

2.5.4 DSC-COMDIO002-WT Layout and I/O Connectors

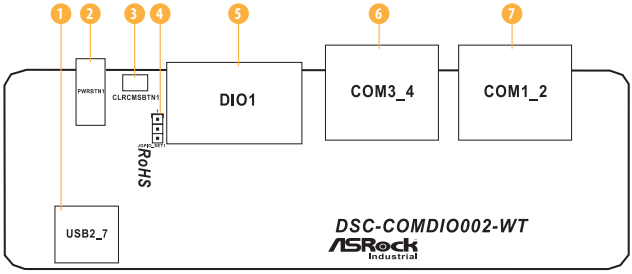

1 : USB2_7 (USB2.0 Port)

2 : PWRBTN1 (Power button)

3 : CLRCMSBTN1 (Clear CMOS button)

4 : JGPIO_SET1 (Digital Input / Output default value setting)

5 : Top : DIO [9:16] → DO
Bottom : DIO [1:8]→ DI

Pin	11	12	13	14	15	16	17	18	19	20
Signal Name	DIO9	DIO10	DIO11	DIO12	DIO13	DIO14	DIO15	DIO16	+5V	GND
Pin	**1**	**2**	**3**	**4**	**5**	**6**	**7**	**8**	**9**	**10**
Signal Name	DIO1	DIO2	DIO3	DIO4	DIO5	DIO6	DIO7	DIO8	GND	GND

6 : COM3_4 (COM port headers, RS232)

Pin	Signal Name
1	DCD
2	RXD
3	TXD
4	DTR
5	GND
6	DSR
7	RTS
8	CTS
9	NA

English

7 : COM1_2 (COM port headers, RS232/422/485)

Pin	RS232	RS422	RS485
1	DCD	TX-	RTX-
2	RXD	TX+	RTX+
3	TXD	RX+	NA
4	DTR	RX-	NA
5	GND	GND	GND
6	DSR	NA	NA
7	RTS	NA	NA
8	CTS	NA	NA
9	NA	NA	NA

DI (SIO GPI)

1. Input Channel: 8
2. Input Voltage:
   Low: 0.8Vdc max. (0Vdc min.)
   High: 2Vdc min. (3Vdc max.)
3. Current: 12mA max. per channel

DO (SIO GPO)

1. Output Channel: 8
2. Output Voltage:
   Low: 0.8Vdc max. (0Vdc min.)
   High: 2Vdc min. (3Vdc max.)
3. Current: 12mA max. per channel

2.5.5 DSC-COMDIO003-WT Layout and I/O Connectors (Optional)

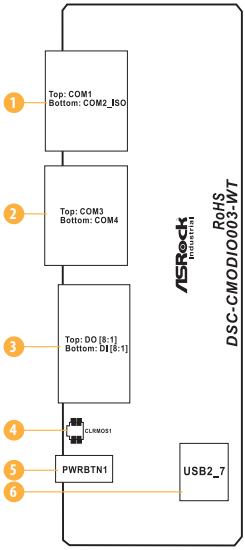

1 : Top : COM Port (COM1) (RS232/422/485)
Bottom : COM Port (COM2_ISO) (ISO RS232/422/485)

2 : Top : COM Port (COM3) (RS232)
Bottom : COM Port (COM4) (RS232)

3 : Top : DIO [9:16]→ DO
Bottom : DIO [1:8]→ DI

Pin	11	12	13	14	15	16	17	18	19	20
Signal Name	DIO9	DIO10	DIO11	DIO12	DIO13	DIO14	DIO15	DIO16	GND_ ISO_ DIO	EXT_ PWR
Pin	**1**	**2**	**3**	**4**	**5**	**6**	**7**	**8**	**9**	**10**
Signal Name	DIO1	DIO2	DIO3	DIO4	DIO5	DIO6	DIO7	DIO8	VCOM	GND_ ISO_ DIO

4 : Clear CMOS Button (CLRMOS1)

5 : Power Button (PWRBTN1)

6 : USB 2.0 Port (USB2_7) (Upper Port Only)

Digital I/O: Sink and Source

1. DI (Sink/Source):

Setting	Description
Input Channel	8
Input Voltage	Low: 3Vdc max. (0Vdc min) High: 10Vdc min. (30Vdc max.)
Isolation Protection	3000 V

- DI Sink topology:

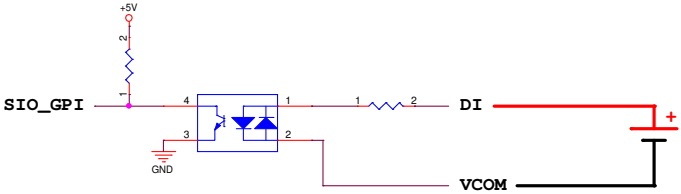

- DI Source topology:

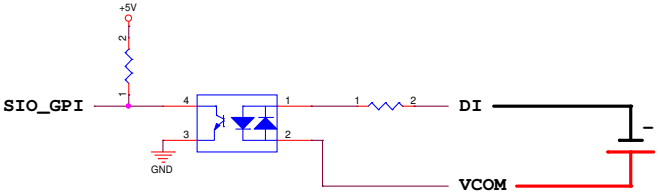

2. DO (Sink)(N-MOSFET type) Specification:

Setting	Description
Output Channel	8
Output Voltage	+5Vdc ~ +30 Vdc
Sink Current	350mA max./per channel
Isolation Protection	3000 V

- DO Sink topology:

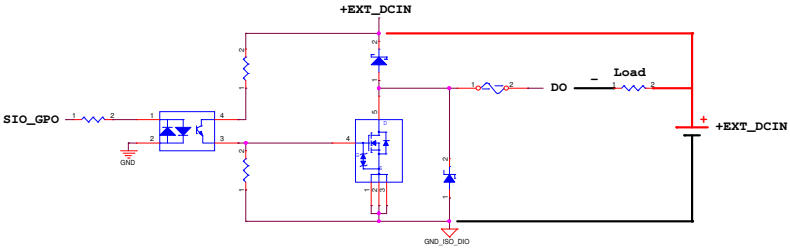

2.5.6 DSC-COMDIO004SO-WT Layout and I/O Connectors (Optional)

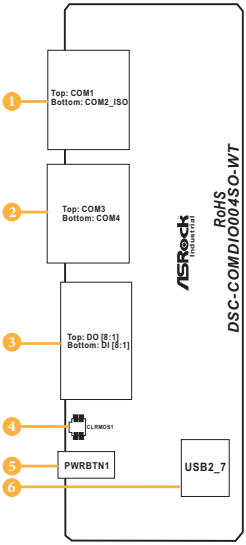

1 : Top: COM Port (COM1) (RS232/422/485)

Bottom: Isolation 3 in 1 COM Port (COM2) (ISO RS232/422/485)

Pin	RS232	RS422	RS485
1	DCD	TX-	RTX-
2	RXD	TX+	RTX+
3	TXD	RX+	NA
4	DTR	RX-	NA
5	GND	GND	GND
6	DSR	NA	NA
7	RTS	NA	NA
8	CTS	NA	NA
9	RI	NA	NA

2 : Top: COM Port (COM3) (RS232)

Bottom: COM Port (COM4) (RS232)

Pin	Signal Name
1	DCD
2	RXD
3	TXD
4	DTR
5	GND
6	DSR
7	RTS
8	CTS
9	RI

3 : Top: DIO [9:16]→DO

Bottom: DIO [1:8]→DI

Pin	11	12	13	14	15	16	17	18	19	20
Signal Name	DIO9	DIO10	DIO11	DIO12	DIO13	DIO14	DIO15	DIO16	GND_ ISO_ DIO	EXT_ PWR
Pin	**1**	**2**	**3**	**4**	**5**	**6**	**7**	**8**	**9**	**10**
Signal Name	DIO1	DIO2	DIO3	DIO4	DIO5	DIO6	DIO7	DIO8	VCOM	GND_ ISO_ DIO

4 : Clear CMOS Button (CLRMOS1)

5 : Power Button (PWRBTN1)

6 : USB 2.0 Port (USB2_7) (Upper Port Only)

Digital I/O: Sink and Source

1. DI (Sink/Source):

Setting	Description
Input Channel	8
Input Voltage	Low: 3Vdc max. (0Vdc min) High: 10Vdc min. (30Vdc max.)
Isolation Protection	3000 V

- DI Sink topology:

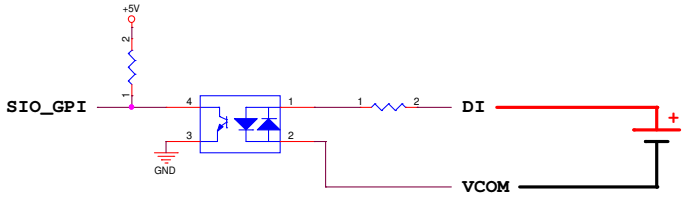

- DI Source topology:

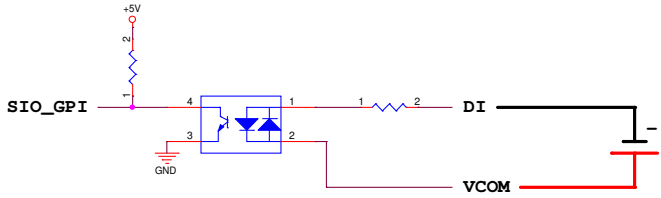

English

2. DO (Source) (P-MOSFET type) Specification:

Setting	Description
Output Channel	8
Output Voltage	+5Vdc ~ +24 Vdc
Sink Current	1A max./per channel
Isolation Protection	3000 V

- DO Source topology:

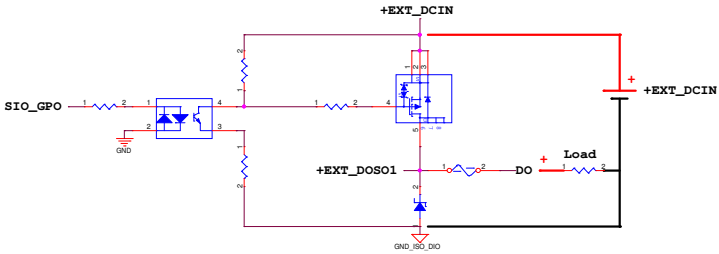

2.5.7 DSC-COMDIO005-WT Layout and I/O Connectors (Optional)

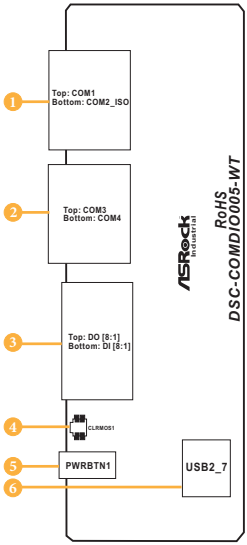

1 : Top: COM Port (COM1) (RS232/422/485)

Bottom: Isolation 3 in 1 COM Port (COM2) (ISO RS232/422/485)

Pin	RS232	RS422	RS485
1	DCD	TX-	RTX-
2	RXD	TX+	RTX+
3	TXD	RX+	NA
4	DTR	RX-	NA
5	GND	GND	GND
6	DSR	NA	NA
7	RTS	NA	NA
8	CTS	NA	NA
9	RI	NA	NA

2 : Top: COM Port (COM3) (RS232)

Bottom: COM Port (COM4) (RS232)

Pin	Signal Name
1	DCD
2	RXD
3	TXD
4	DTR
5	GND
6	DSR
7	RTS
8	CTS
9	RI

3 : Top: DIO [9:16]→DO

Bottom: DIO [1:8]→DI

Pin	11	12	13	14	15	16	17	18	19	20
Signal Name	DIO9	DIO10	DIO11	DIO12	DIO13	DIO14	DIO15	DIO16	GND_ ISO_ DIO	EXT_ PWR
Pin	**1**	**2**	**3**	**4**	**5**	**6**	**7**	**8**	**9**	**10**
Signal Name	DIO1	DIO2	DIO3	DIO4	DIO5	DIO6	DIO7	DIO8	VCOM	GND_ ISO_ DIO

4 : Clear CMOS Button (CLRMOS1)

5 : Power Button (PWRBTN1)

6 : USB 2.0 Port (USB2_7) (Upper Port Only)

Digital I/O: Sink and Source

1. DI (Sink/Source):

Setting	Description
Input Channel	8
Input Voltage	Low: 3Vdc max. (0Vdc min.) High: 10Vdc min. (30Vdc max.)
Isolation Protection	3000 V

- DI Sink topology:

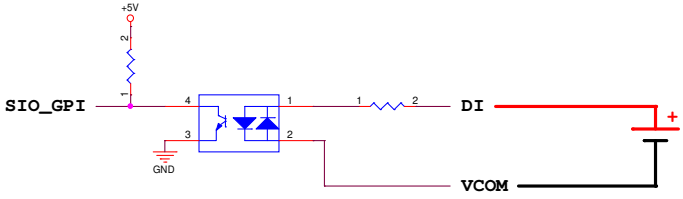

- DI Source topology:

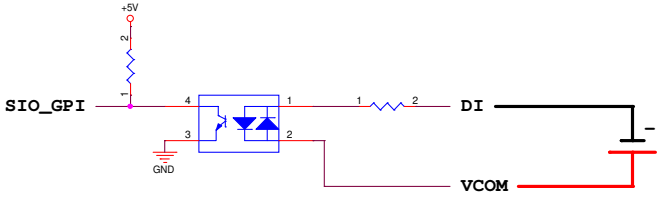

English

2. DO (Source) (P-MOSFET type) Specification:

Setting	Description
Output Channel	8
Output Voltage	+5Vdc ~ +24 Vdc
Sink Current	1A max./per channel
Isolation Protection	3000 V

- DO Source topology:

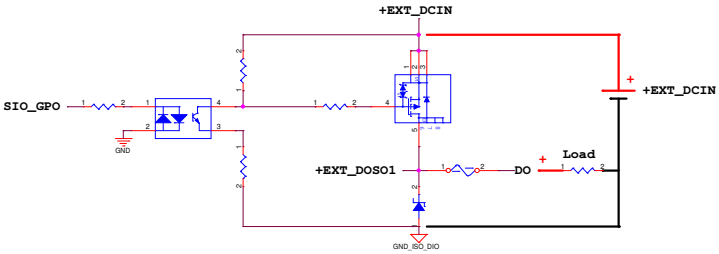

2.5.8 DSC-COMDIO006-WT Layout and I/O Connectors (Optional)

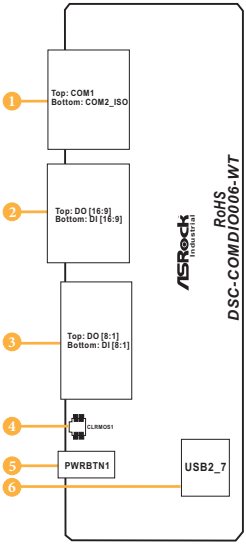

1 : Top: COM Port (COM1) (RS232/422/485)

Bottom: Isolation 3 in 1 COM Port (COM2) (ISO RS232/422/485)

Pin	RS232	RS422	RS485
1	DCD	TX-	RTX-
2	RXD	TX+	RTX+
3	TXD	RX+	N/A
4	DTR	RX-	N/A
5	GND	GND	GND
6	DSR	N/A	N/A
7	RTS	N/A	N/A
8	CTS	N/A	N/A
9	RI	N/A	N/A

2 : Top: DIO [25:32]→DO

Bottom: DIO [17:24]→DI

Pin	11	12	13	14	15	16	17	18	19	**20**
Signal Name	DIO25	DIO26	DIO27	DIO28	DIO29	DIO30	DIO31	DIO32	GND_ ISO_ DIO	EXT_ PWR
Pin	1	2	3	4	5	6	7	8	9	**10**
Signal Name	DIO17	DIO18	DIO19	DIO20	DIO21	DIO22	DIO23	DIO24	VCOM	GND_ ISO_ DIO

English

3 : Top: DIO [9:16]→DO

Bottom: DIO [1:8]→DI

Pin	11	12	13	14	15	16	17	18	19	20
Signal Name	DIO9	DIO10	DIO11	DIO12	DIO13	DIO14	DIO15	DIO16	GND_ ISO_ DIO	EXT_ PWR
Pin	**1**	**2**	**3**	**4**	**5**	**6**	**7**	**8**	**9**	**10**
Signal Name	DIO1	DIO2	DIO3	DIO4	DIO5	DIO6	DIO7	DIO8	VCOM	GND_ ISO_ DIO

4 : Clear CMOS Button (CLRMOS1)

5 : Power Button (PWRBTN1)

6 : USB 2.0 Port (USB2_7) (Upper Port Only)

Digital I/O: Sink and Source

1. DI (Sink/Source):

Setting	Description
Input Channel	16
Input Voltage	Low: 3Vdc max. (0Vdc min.) High: 10Vdc min. (30Vdc max.)
Isolation Protection	3000 V

- DI Sink topology:

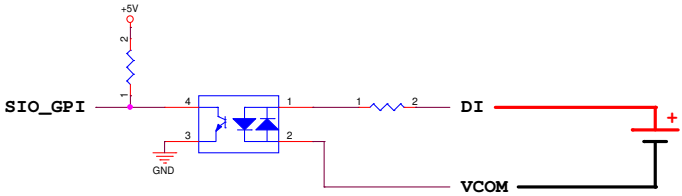

- DI Source topology:

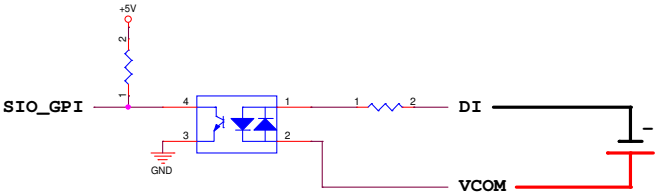

English

2. DO (Source) (P-MOSFET type) Specification:

Setting	Description
Output Channel	16
Output Voltage	+5Vdc ~ +24 Vdc
Sink Current	1A max./per channel
Isolation Protection	3000 V

- DO Source topology:

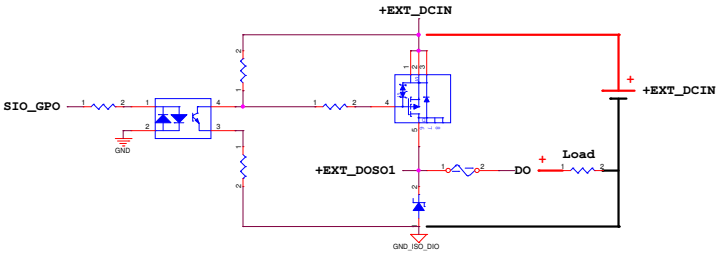

2.5.9 DSC-SLOT005-WT Layout and I/O Connectors (Support PCIe Gen5, 9030S/9032S/9040S/9042S Only)

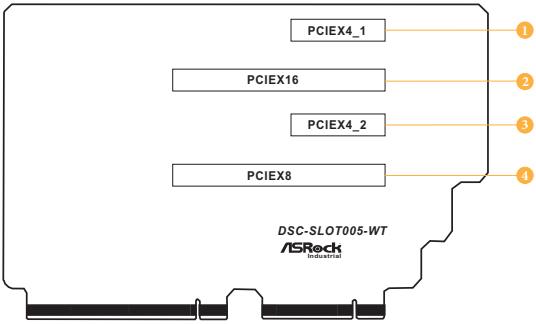

1 : PCIEX4_1 (PCIe x4 slot)

2 : PCIEX16 (PCIe x16 slot, switch with x8)

3 : PCIEX4_2 (PCIe x4 slot)

4 : PCIEX8 (PCIe x8 slot)

2.5.10 VGA-PWR Layout and I/O Connectors (Optional)

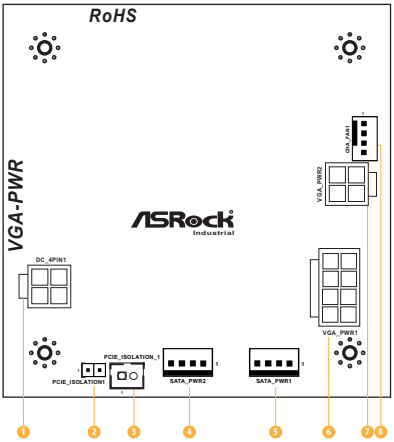

English

Specification

Controller/Major IC	• TI LM5176PWPR • Intersil ISL8117AFRZ-T
Input Interface/Power	• 1 x 4-pin DC-IN Power connector (+12V~36V) • 1 x PS_ON# Header
Output connector	• 1 x 8-pin VGA Power connector , support 12V • 1 x 4-pin VGA Power connector, support 12V • 1 x 4-pin FAN connector , support 12V • 2 x 4-pin SATA Power connector, support 5V/12V
VGA Power Output	• VGA Loading <200W (with DC-IN +12V~+36V); VGA TDP<200W • VGA Loading <350W (Peak) (with DC-IN +24V~+36V); VGA TDP<285W

1 : 4-pin DC-IN Power Connector (DC_4PIN1)

* Support DC+12V~+DC+36V Input

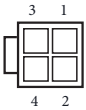

Pin	Signal Name
1, 2	GND
3, 4	+28VA (12V~36V)
5	NC

2 : Option 1 PS_ON# Header (PCIE_ISOLATION1)

* Connect Pin1 & Pin2 to PSON# signal (other motherboard) or short to GND (output default high).

Pin	Signal Name
1	PSON#
2	GND

3 : Option 2 PS_ON# Header (PCIE_ISOLATION_1)

Pin	Signal Name
1	PSON#
2	GND

4 : SATA Power Connector (SATA_PWR2)

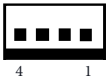

Pin	Signal Name
1	+5V
2	GND
3	GND
4	+12V

5 : SATA Power Connector (SATA_PWR1)

Pin	Signal Name
1	+5V
2	GND
3	GND
4	+12V

6 : VGA Power Connector (VGA_PWR1)

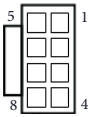

Pin	Signal Name
1, 2, 3	+12V
4, 5, 6, 7, 8	GND
9	NC

7 : 4-pin VGA Power Connector (VGA_PWR2)

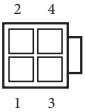

Pin	Signal Name
1, 2	GND
3. 4	+12V
5	NC

8 : 4-pin FAN Power Connector (CHA_FAN1)

Pin	Signal Name
1	GND
2	+12V
3, 4, 5	NC

2.5.11 VGA-PWR600W Layout and I/O Connectors (Optional)

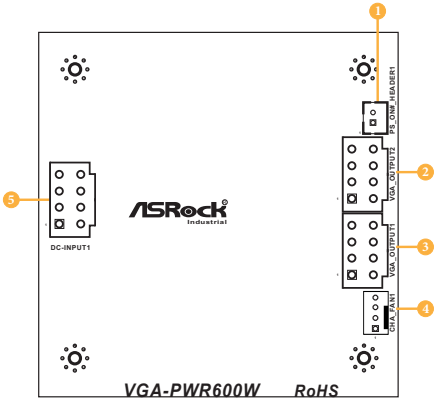

Specification

Controller/Major IC	• Power controller: TI LM5176PWPR • FAN Speed controller: MP1475DJ-LF-Z
Input Interface/Power	• 1 x 8-pin DC_IN Power connector (+12V~36V) • 1 x PS_ON# Header
Output connector	• 2 x 8-pin VGA Power connector • 1 x 4-pin FAN connector
VGA Power Output	• VGA Loading <350W (with DC-IN +12V~+36V); VGA TDP<350W • VGA Loading <600W (with DC-IN +24V~+36V); VGA TDP<600W

1 : Option 1 Header (PS_ON#_HEADER1)

Pin	Signal Name
1	PSON#
2	GND

English

2 : VGA Power Connector1 (VGA_OUTPUT1)

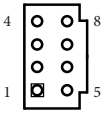

Pin	Signal Name
1-3	+12V_OUT (+12V)
4-8	GND

3 : VGA Power Connector2 (VGA_OUTPUT2)

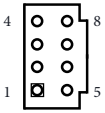

Pin	Signal Name
1-3	+12V_OUT (+12V)
4-8	GND

4 : FAN Power Connector (CHA_FAN1)

Pin	Signal Name
1	GND
2	+12V_FAN
3	NA
4	NA

5 : DC-IN Power Connector (DC_INPUT1)

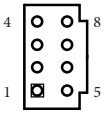

Pin	Signal Name
1-4	GND
5-8	+36VA (9V~36V)

Chapter 3 Hardware Installation and Maintenance

This chapter helps you disassemble the system and install components.

Before You Begin

Before you work with the system, pay close attention to the "Important Safety Instructions" at the beginning of this manual.

1. Make sure the system is powered off.
   Power down the system if it is still running.
   (1) Press the Power button to shut down the system. The Power LED turns from solid green to dark.
   (2) Disconnect the power cord first from the AC outlet and then from the system. The power LED turns off.
2. Ensure you have a clean and stable working environment. Avoid dust and dirt because contaminants may cause malfunctions.
3. Ground yourself properly before touching any system component. A discharge of static electricity may damage components. Wear a grounded wrist strap if available.

Screw Driver Recommended Torque Value	
Items secured to Chassis	**Value (Kgf-cm)**
Chassis & Top Case/Heatsink	3.0 + / - 0.5
Rubber Foot	3.0 + / - 0.5
Desk Mount	3.0 + / - 0.5
2.5" Tray and 2.5" Device	3.0 + / - 0.5
CPU Socket	3.0 + / - 0.5
Items secured to PCBA	**Value (Kgf-cm)**
Device : M.2 Module	2.0 + / - 0.5
Phoenix DC in & IGN	2.0 + / - 0.5
CPU Socket	3.0 + / - 0.5

3.1 How to Disassemble the System

1. Remove all screws securing the heatsink.
2. Remove the heatsink.

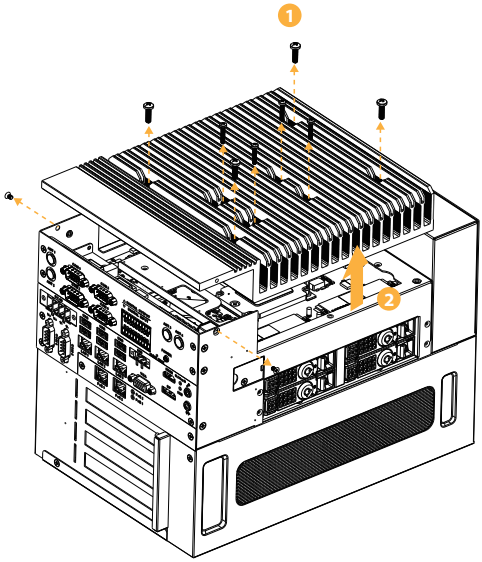

3. Remove the screws securing the small panel.
4. Remove the small panel from the I/O side of the system.

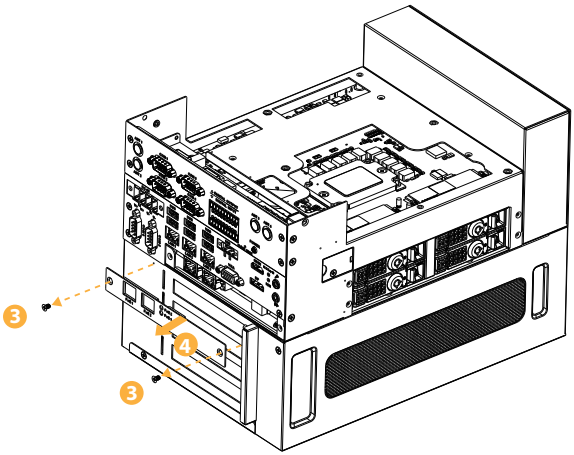

5. Release the screws and remove the middle panel from the I/O side of the system.

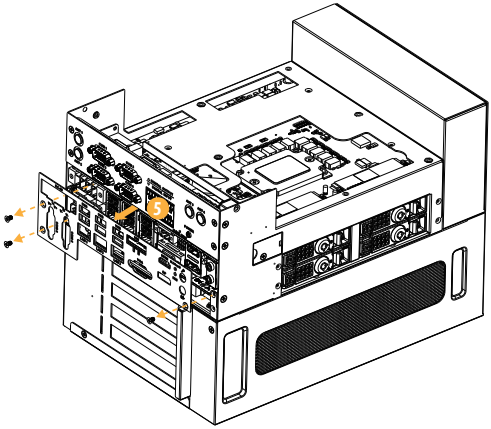

6. Remove the screws securing the big panel.
7. Remove the big panel from the I/O side of the system.

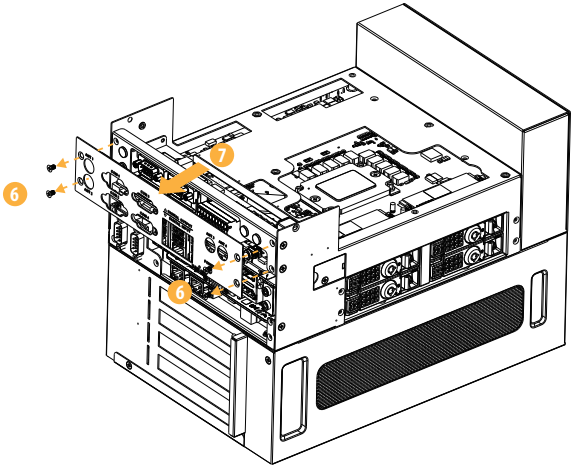

8. Remove the screw securing the cover.
9. Push the cover toward the I/O side of the chassis to remove the cover from the locked position. Remove the cover.

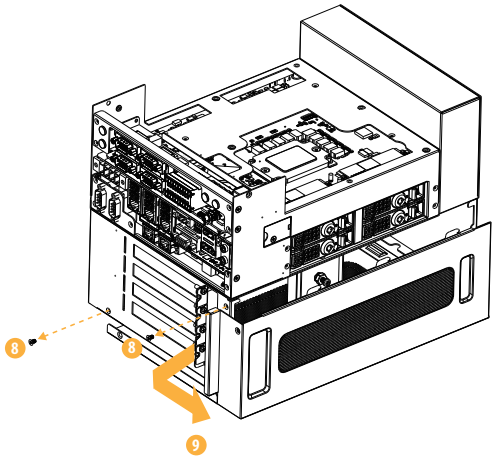

10. Remove the four screws from the outside of the chassis.

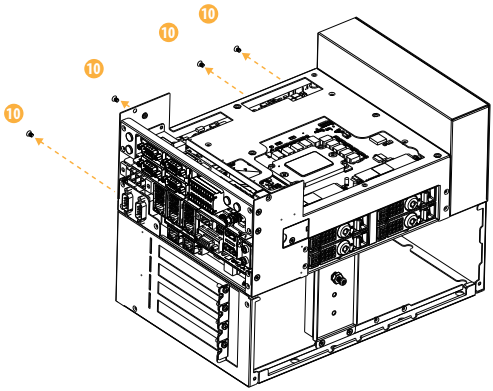

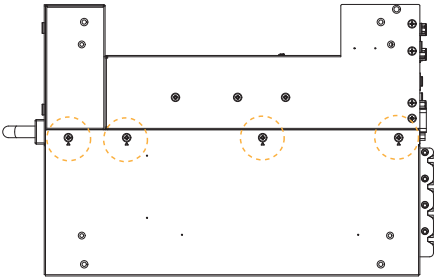

11. Remove the screws from the inside of the chassis.

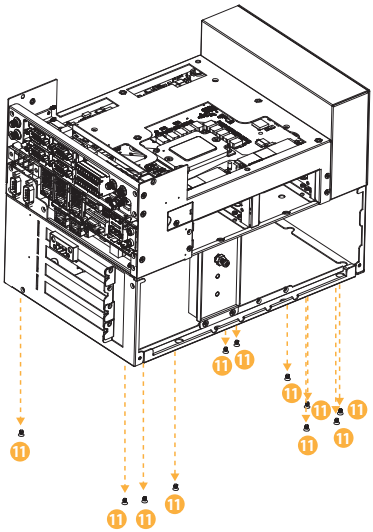

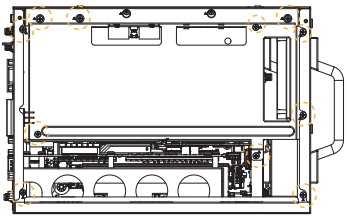

12. Pull out the motherboard tray from the system.

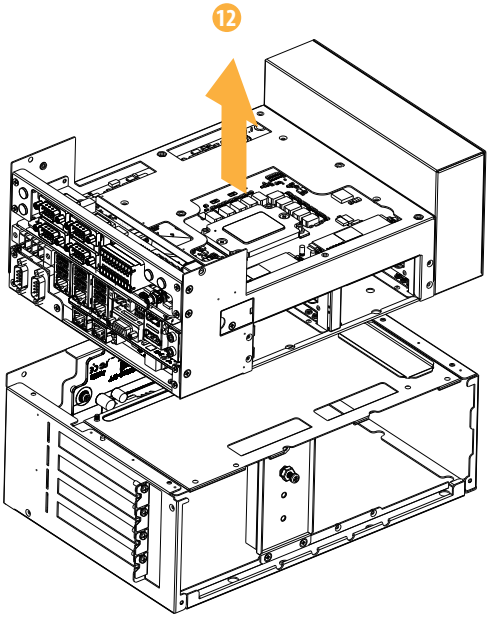

13. Ensure that the HDD trays or HDD tray covers are removed. Then remove the five screws marked with a triangle.
14. Then remove the HDD case.

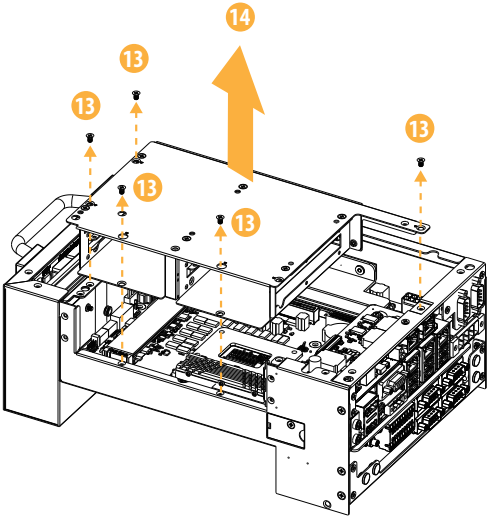

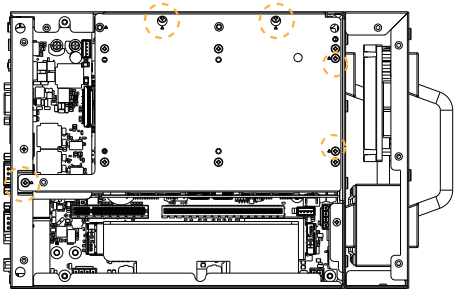

3.2 How to Install the CPU

1. *Before you insert the 1700-Pin CPU into the socket, please check if the CPU surface is unclean, or if there are any* ***bent pins*** *in the socket. Do not force to insert the CPU into the socket if any of the situations above is found.*
   Otherwise, the CPU will be seriously damaged.
2. *Unplug all power cables before installing the CPU.*

1. Remove the two screws.

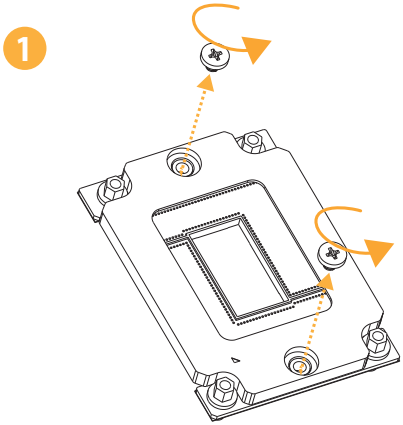

2. Lift the socket.

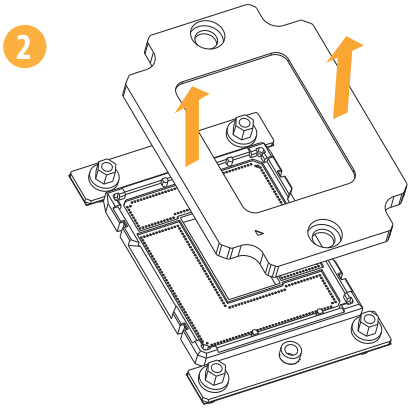

English

3. Align the triangle marks on both CPU and socket (marked in the below illustration), and install the CPU onto the socket.

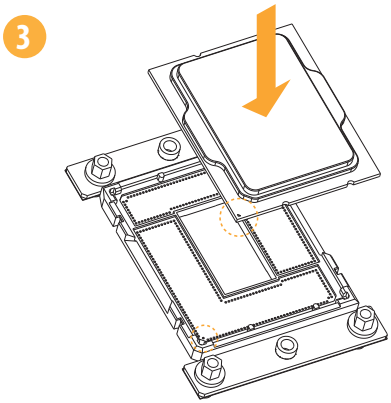

The CPU can only fit in one way. CPU mislaignment will damge the motherboard.

4. Put back the socket.

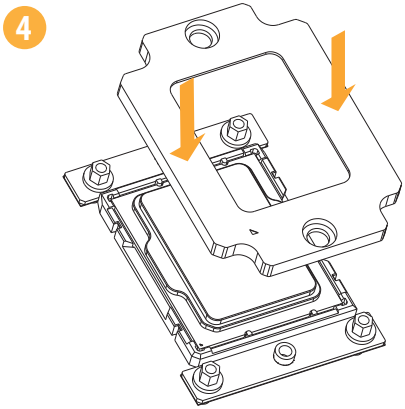

5. Tighten the screws to secure the CPU.

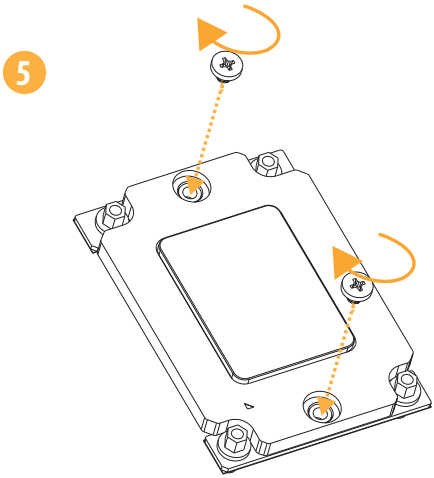

3.3 How to Install the Hard Disk Drive

Installing a Hard Disk Drive into 2.5" Hard Drive Tray

The system supports hot-swappable 2.5” hard drives.

Removing 2.5” Hard Drive Trays from the Chassis

1. Press the locking lever latch on the drive tray to unlock the retention lever.
2. Rotate the lever out and away from the module bay and pull the hard drive out of the HDD tray.

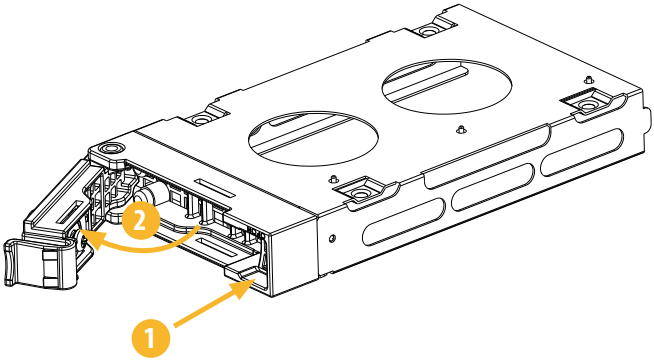

Installing a 2.5” Hard Drive to the Hard Drive Tray (Default Qty is one piece.)

1. Place a 2.5" HDD into the tray with the printed circuit board side facing down. Carefully align the mounting holes in the hard drive and the tray.

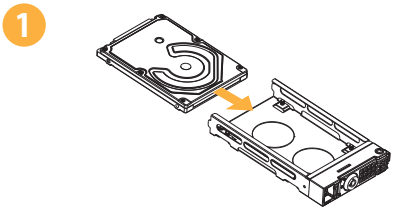

2. Secure the hard drive using four screws.

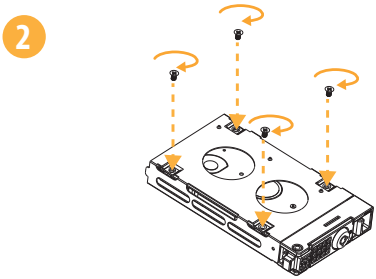

3. Slide the drive tray into the HDD bay until the drive is fully seated.
4. Push in the locking lever to lock the HDD tray into place.

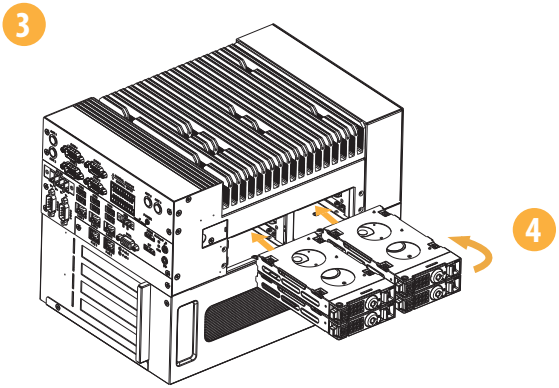

3.4 How to Install the SIM Card

Installing a SIM Card into a SIM Card Slot

1. Remove the screw securing the SIM card slot cover.
2. Remove the SIM card slot cover.

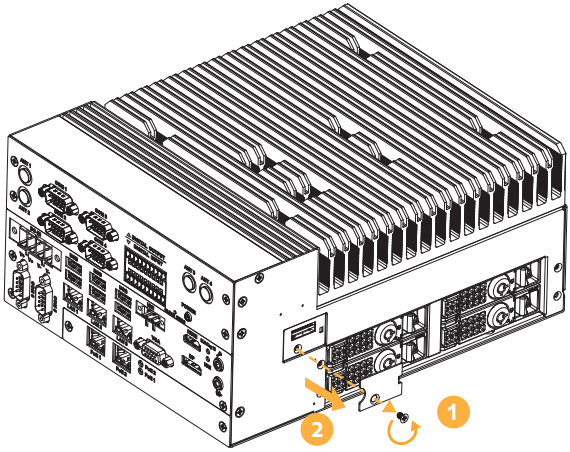

3. Insert a SIM card to the SIM car slot.
   SIM1 (Upper Slot): When inserting the SIM Card to the upper slot, make sure the notch on the SIM card is oriented with the gold contacts face down.
   SIM2 (Lower Slot): When inserting the SIM Card to the lower slot, make sure the notch on the SIM card is oriented with the gold contacts face up.

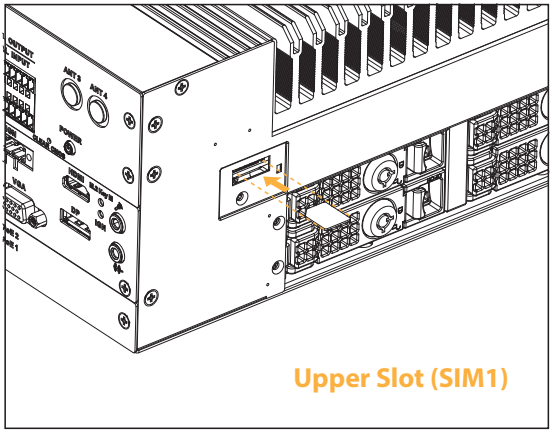

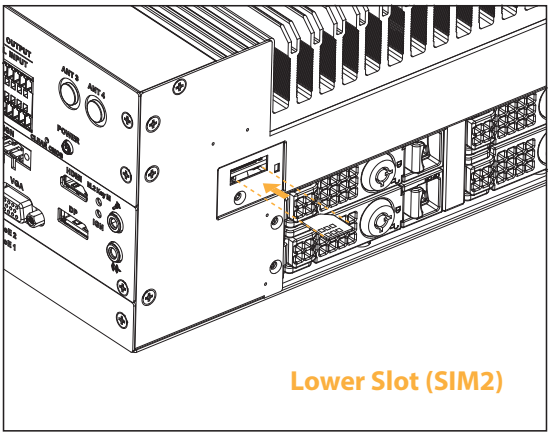

3.5 How to Install the Desk Mount Bracket

1. Attach the two desk mount brackets to the iEPF-9030S Series/iEPF-9040S Series or iEP-9030E Series/iEP-9040E Series. Then secure them with four screws.

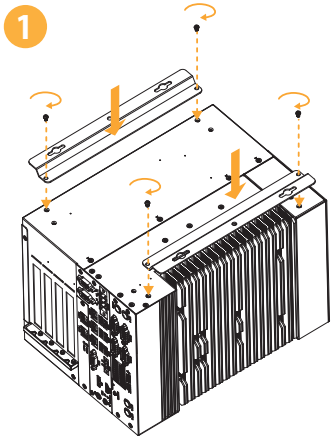

iEPF-9030S Series/iEPF-9040S Series

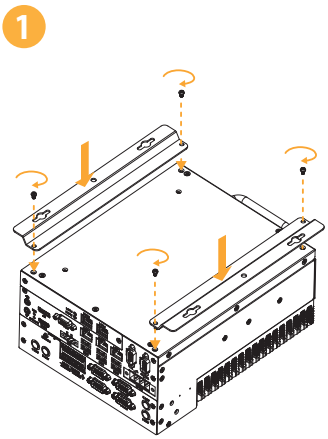

iEP-9030E Series/iEP-9040E Series

2. You can then attach the iEPF-9030S Series/iEPF-9040S Series or iEP-9030E Series/iEP-9040E Series to any horizontal surface with the rest of the four screws.

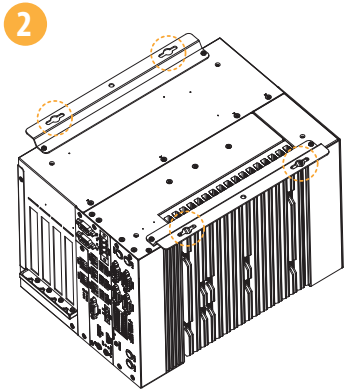

iEPF-9030S Series/iEPF-9040S Series

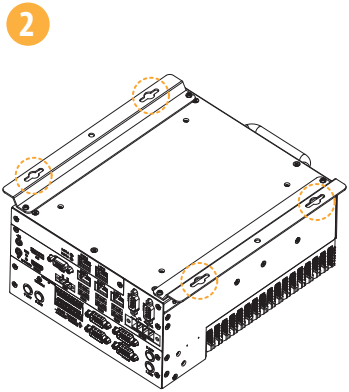

iEP-9030E Series/iEP-9040E Series

3.6 How to Install the Rubber Foot

1. Attach four rubber foots to the iEPF-9030S Series/iEPF-9040S Series or iEP-9030E Series/iEP-9040E Series. Then secure them with four screws.

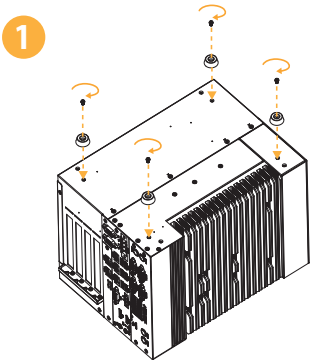

iEPF-9030S Series/iEPF-9040S Series

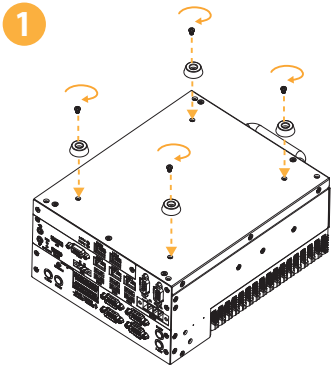

iEP-9030E Series/iEP-9040E Series

2. Place the iEPF-9030S Series/iEPF-9040S Series or iEP-9030E Series/iEP-9040E Series to any horizontal surface.

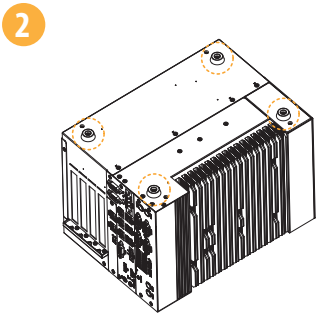

iEPF-9030S Series/iEPF-9040S Series

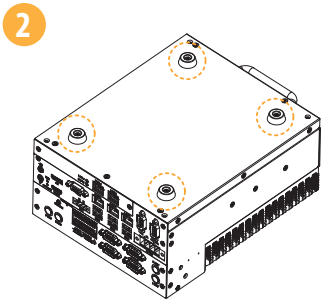

iEP-9030E Series/iEP-9040E Series

3.7 How to Install the Memory Module

For dual channel configuration, you always need to install identical (the same brand, speed, size and chip-type) DDR5 SO-DIMM pairs.

The SO-DIMM only fits in one correct orientation. It will cause permanent damage to the motherboard and the DIMM if you force the DIMM into the slot at incorrect orientation.

1. Carefully insert the SO-DIMM memory modules into the slot at a 30-degree angle.

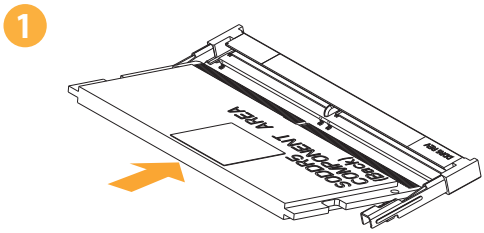

2. Push down until the modules snap into place.

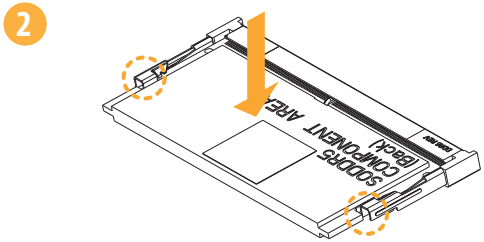

English

3.8 How to Install the M.2 SSD with Heatsink and Thermal Pad

Installing the M.2 SSD

1. Locate the M.2 slot on the motherboard.

2. Carefully insert the M.2 SSD into the the slot at a 30-degree angle.

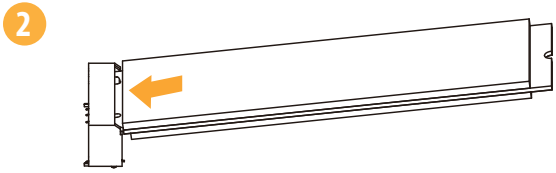

3. Tighten the screw to secure the M.2 SSD to the motherboard.

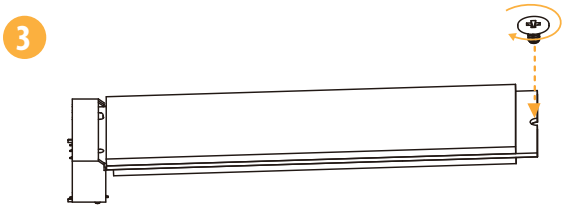

Installing the M.2 Pad and Heatsink

1. Remove protective films on both sides of the three thermal pads, and apply the pads onto each of the three chokes.

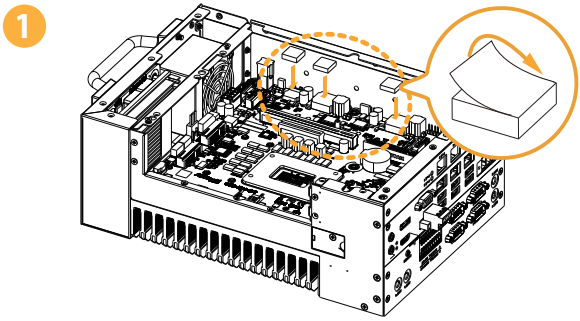

2. Align the M.2 heatsink to the three screw holes on the right panel, and secure it with three screws (#6-32 x 5 countersunk screws * 3pcs) from the outside of the chassis.

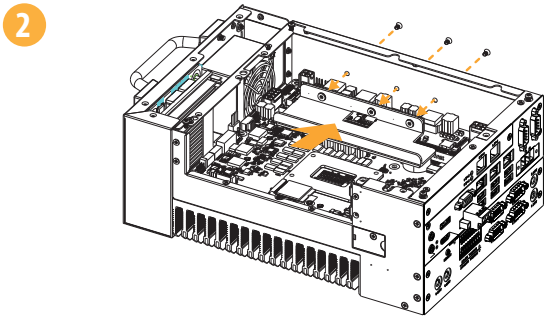

3.9 How to Install the VGA-PWR Card

3.9.1 VGA -PWR Board

1. Remove the rear cover.

   a. Remove the three screws on the chassis by the screwdriver. (Countersunk Head Screw #63-2x5 *3)

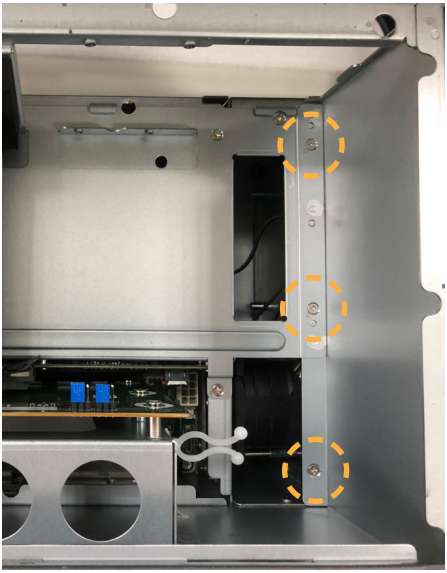

   b. Remove the five screws of the rear cover by the screwdriver. (Countersunk Head Screw #63-2x5 *5)

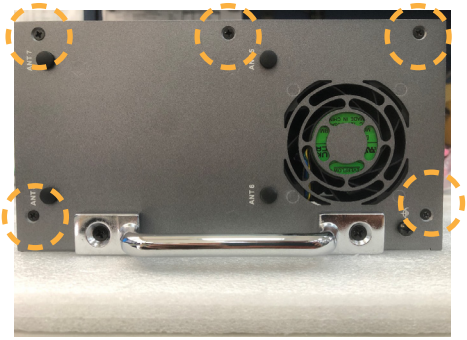

c. Remove the rear cover.

2. Assemble the VGA power board.

a. Attach the VGA Power Board to the rear cover, and secure it with four screws.
VGA Power Board *1 piece; Flat Head Screw #63-2x5 *4 pieces.
Note: Screwdriver Torque = 3.0 +/- 0.5 kgf-cm

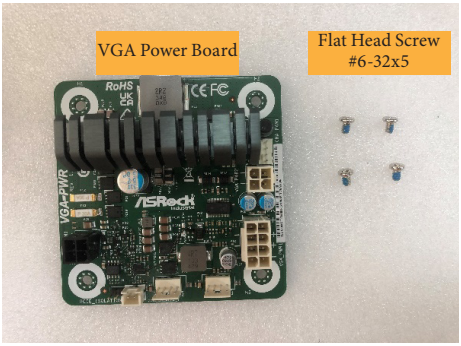

English

3. Assemble the VGA power board cables.

   a. Connect 2-, 4-, and 8-pin cables to the correspinding ports.
      Pin Cable*1 piece; 4 Pin Cable*1 piece ; 8 Pin Cable*1 piece.

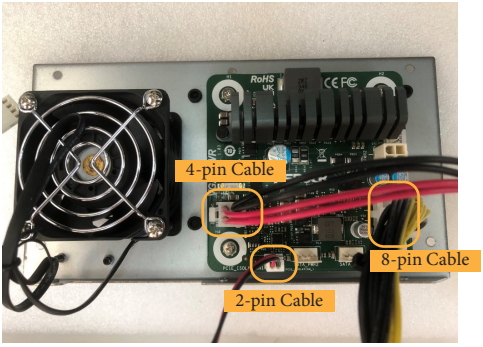

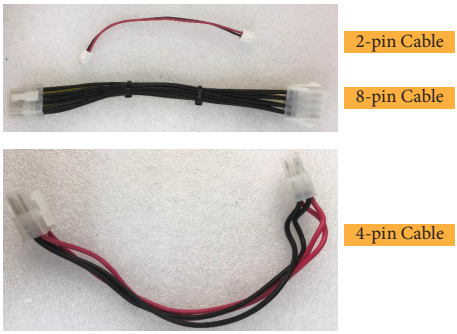

4. Assemble the rear cover

   a. Re-install the rear cover.

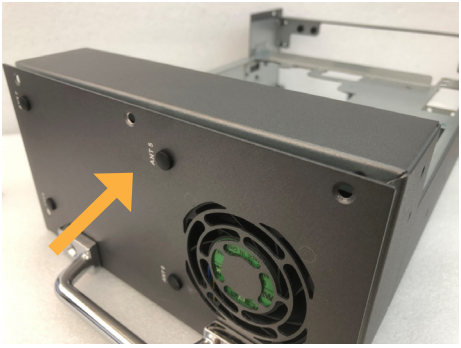

b. Secure the rear cover with the five screws.
Countersunk Head Screws (#6-32x5)
Note: Screwdriver Torque = 3.0 +/- 0.5 kgf-cm

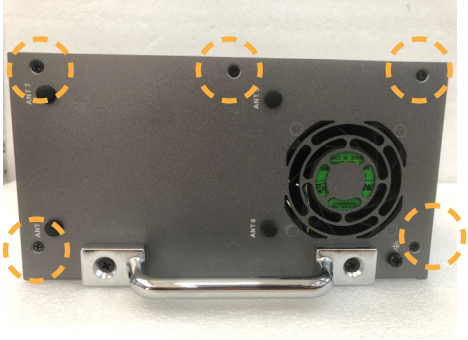

Countersunk Head Screw #6-32x5

5. Connect the 2-, 4-pin and fan cables to the corresponding ports.

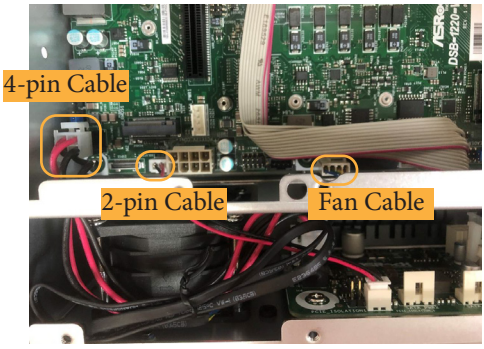

English

3.9.2 VGA-PWR600W Board

1. Remove the rear cover.

   a. Remove the five screws of the rear cover by the screwdriver. (Countersunk Head Screw #63-2x5 *5)

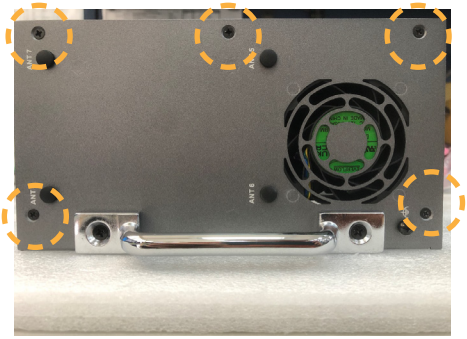

   b. Remove the rear cover.

   c. Attach the thermal pad to the bottom side of the VGA-PWR600W.

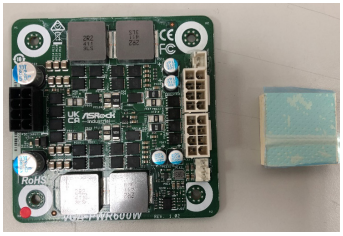

VGA-PWR600W Thermal Pad

2. Assemble VGA-PWR Board.

   a. Assemble the VGA-PWR600W board using four nuts and a screwdriver set to a torque of 3.0 ± 0.5 kgf·cm.

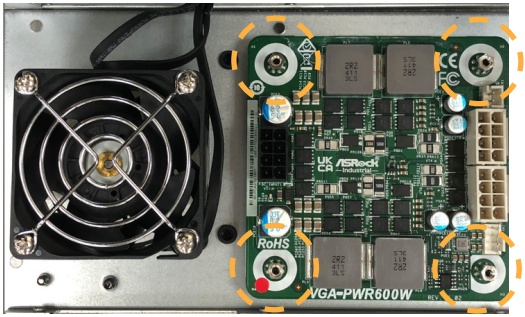

Nuts

   b. Assemble VGA-PWR Heatsink: Remove the thermal pad liners from the heatsink.

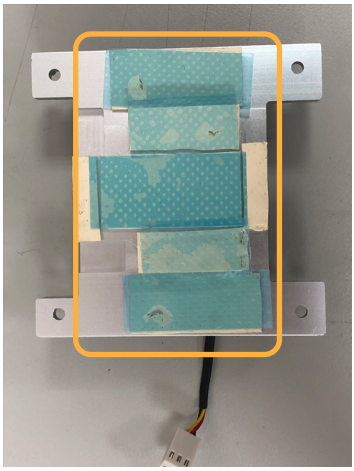

English

c. Assemble the VGA-PWR600W heatsink using four Flat Head Screws. Tighten the screws with a torque of 3.0 ± 0.5 kgf-cm.

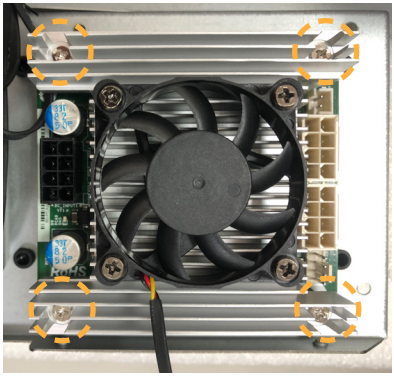

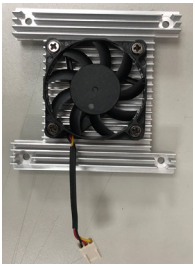

VGA-PWR600W SINK

Flat Head Screw

3. Assemble the following VGA-PWR Board Cables: one 2 Pin Cable (connected to the sink fan connector), one 8 Pin Cable 400mm, and one 8 Pin Cable 140mm.

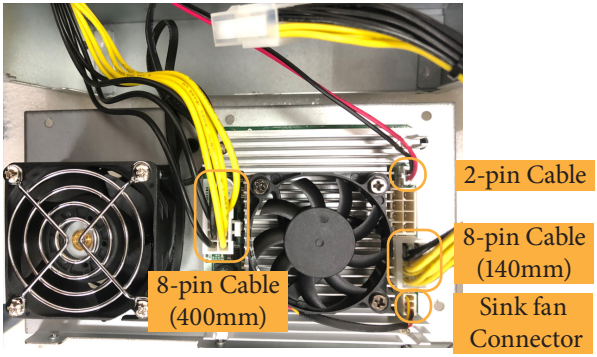

2-pin Cable

8-pin Cable (140mm)

8-pin Cable (400mm)

4. Assemble Rear Cover.

   a. Re-install the rear cover.

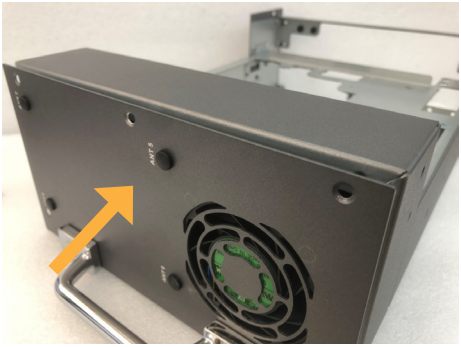

   b. Secure the rear cover with the five screws.
      Countersunk Head Screws (#6-32x5)
      Note: Screwdriver Torque = 3.0 +/- 0.5 kgf-cm

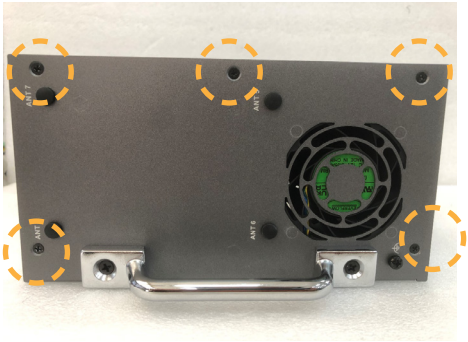

English

Countersunk Head Screw #6-32x5

5. Cable Plug Positions: Connect the 400mm 8-pin cable, 2-pin cable, and fan cable to their corresponding headers.

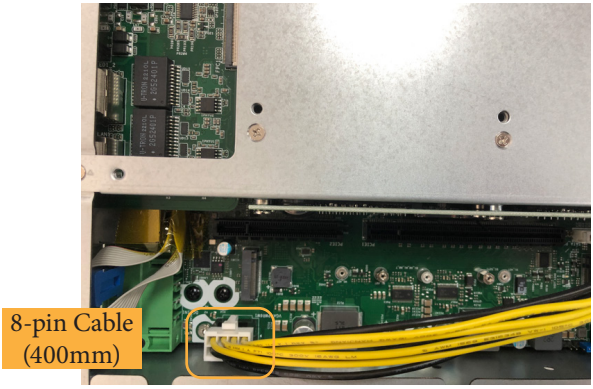

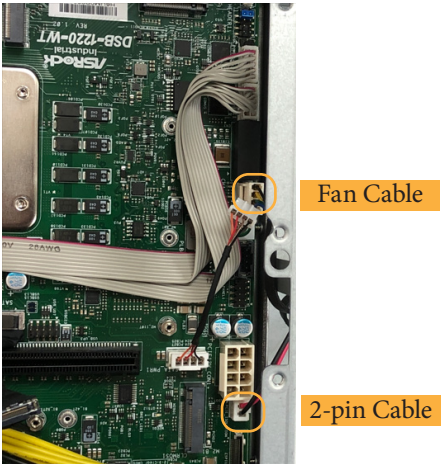

6. Connect the 8P to 2P + 6P×2 adapter cable to the 140mm 8-pin cable.

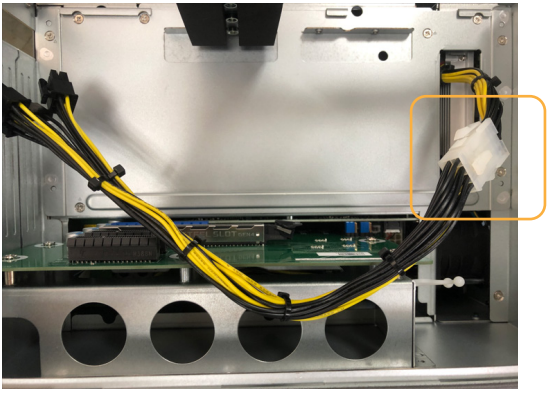

3.10 How to Install the Riser Card

There are four PCI Express slots on the board.

Before installing an expansion card, please make sure that the power supply is switched off or the power cord is unplugged. Please read the documentation of the expansion card and ensure necessary hardware settings for the card before you start the installation.

1. PCIe slots:

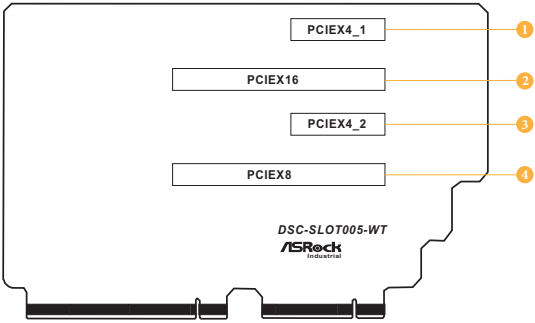

No.	Description
1	PCIe Gen4 x4 slot is used for PCIe x4 lane width cards.
2	PCIe Gen5 x16 slot is used for PCIe x16 lane width graphic cards or x8 lane width cards.
3	PCIe Gen4 x4 slot is used for PCIe x4 lane width cards.
4	PCIe Gen5 x8 slot is used for PCIe x8 lane width cards.

2. With the default card holder assembled in the system for enhanced reliability, the dimensions of the expansion card is limited to 275 x 113 x 60 mm.
   If the card holder is removed, the dimensions of the expansion card are limited to 275 x 138 x 60 mm.

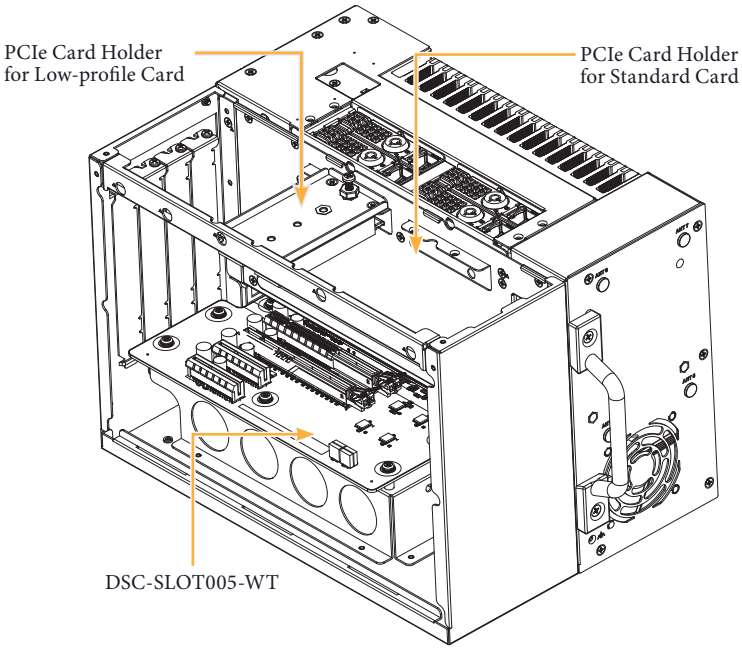

3. The VGA Card Assembly.

   a. Remove the corresponding screws based on the position of the VGA card.

   b. Remove the covers.

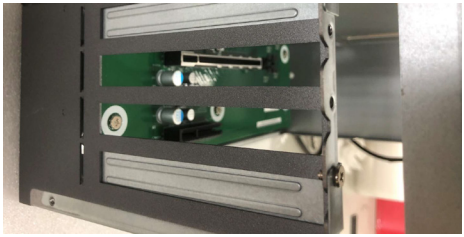

   c. Insert the VGA card.

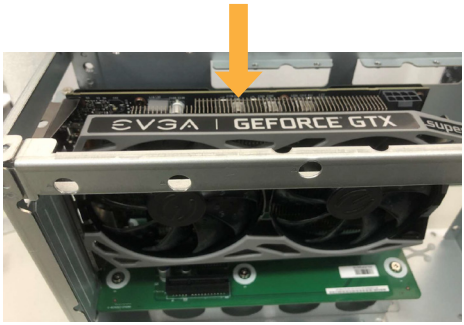

d. Re-secure the screws.

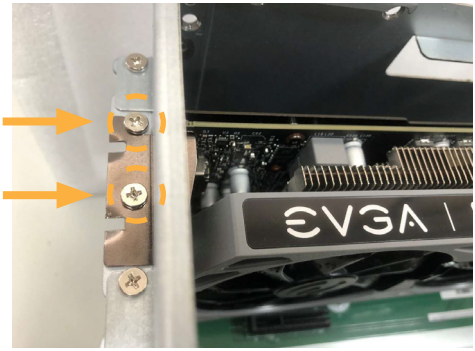

1. In the case of graphic cards exceeding 300W, the system fan must operate at full speed.

2. Dimensions should not exceed 275mm x 138mm x 60mm (L x H x D), which means the total length of the graphic card and power cable should not exceed 275mm.

3. DC-IN is 24V, and the VGA-PWR board can provide 300W (with an added MOS heatsink) in addition to the onboard 75W to meet the requirements of a 300W graphic card; besides, the VGA-PWR600W board can provide 600W in addition to the onboard 75W to meet the requirements of a 600W graphic card in total.

4. If the graphic card is under 180W and with external 8-pin power connector, the connection method between the motherboard and the graphic is shown in "Picture 1" on the bottom left. (If there is no external 8-pin power connector on the graphic card, it does not need to be connected.)

5. If the graphic card is over 180W, the system needs to be used in conjunction with the VGA-PWR board. The connection method between the graphic card and the VGA-PWR board is shown in "Picture 2" on the bottom right.

Picture 1

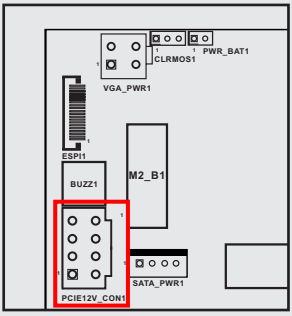

Picture 2

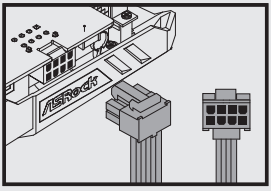

English

3.11 How to Install the WiFi Module (M.2 Key E Socket (2230))

1. Locate the WiFi Module slot on the motherboard.

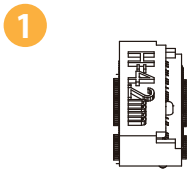

2. Carefully insert the WiFi Module into the slot at a 30-degree angle.

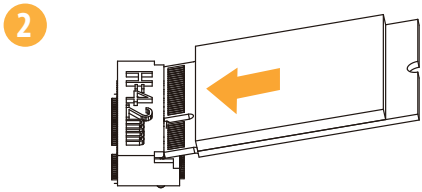

3. Tighten the screw to secure the WiFi Module to the motherboard.

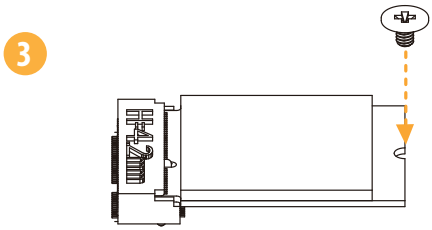

3.12 How to Install the 4G/5G module (M.2 Key B1 2280/3042/3052; M.2 Key B2 3042/3052)

1. Locate the 4G / 5G module slot on the motherboard.

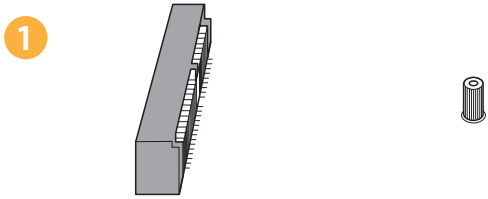

2. Carefully insert the 4G / 5G module into the slot at a 30-degree angle.

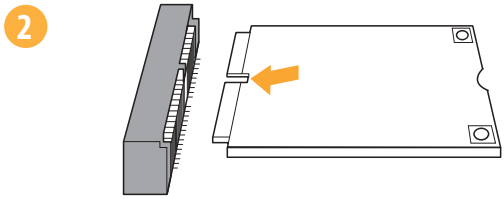

3. Secure the 4G / 5G module with one screw.

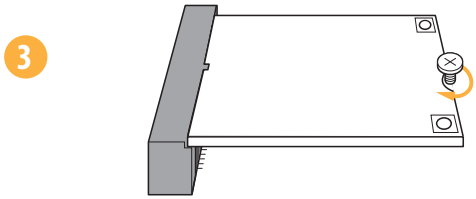

When using the 4G/5G module, please install the 5G heatsink (sold separately) and ensure operation with a DC voltage of 9~24V in an ambient temperature below 50°C.

Installing the Thermal Pad and Heatsink for 4G/5G Module

1. Remove protective films on both sides of the three thermal pads, and apply the pads onto each of the three chokes.

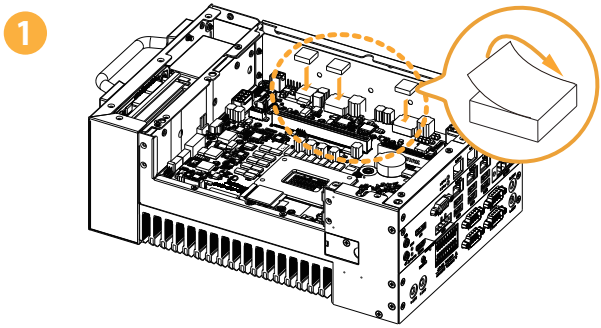

2. Align the M.2 heatsink to the three screw holes on the right panel, and secure it with three screws (#6-32 x 5 countersunk screws * 3pcs) from the outside of the chassis.

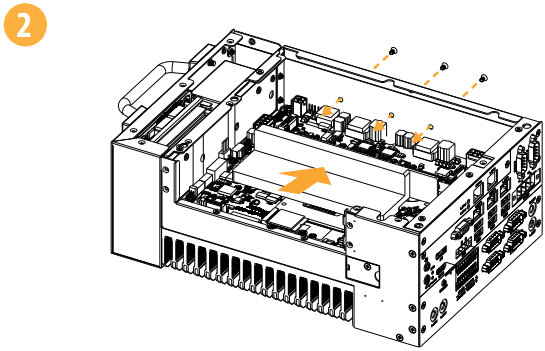

3.13 How to Install the WiFi/4G/5G Antennas and Cables

3.13.1 Antennas

1. Prepare the WiFi or 4G/5G antennas.

WiFi antennas

4G/5G antennas

2. Connect the WiFi or 4G/5G antennas to the antenna connectors. Then turn the antennas clockwise until they are properly tightened.
   You may need to adjust the direction of the antennas for a stronger signal.

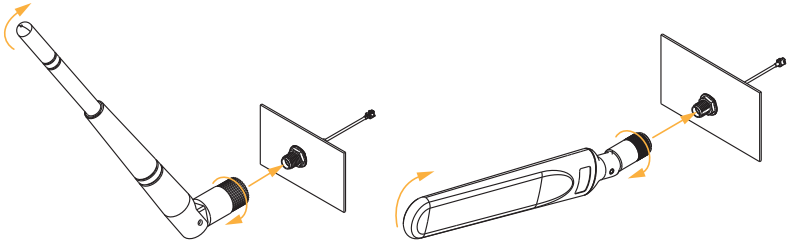

3.13.2 How to Assemble SMA Cables

1. Assemble the washer and nut into the antenna connector hole of the chassis as shown in the following illustration.

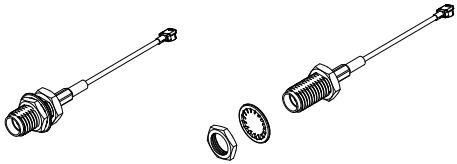

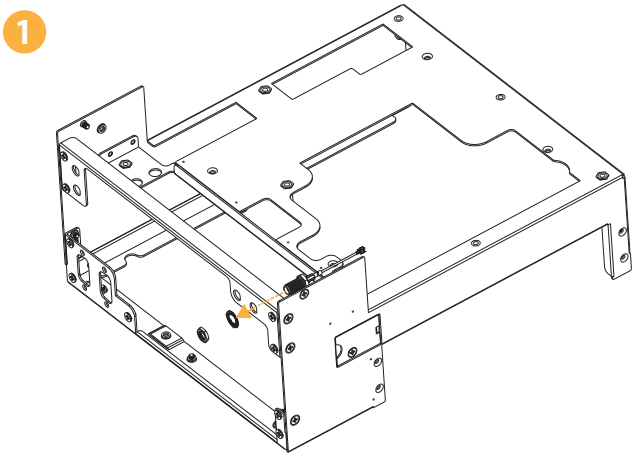

When installing the SMA cable, ensure that the flat surface of the cable and the antenna hole are properly aligned.

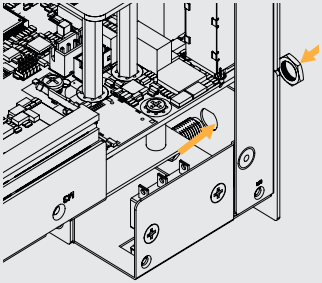

English

2. Turn the nut clockwise to tighten.

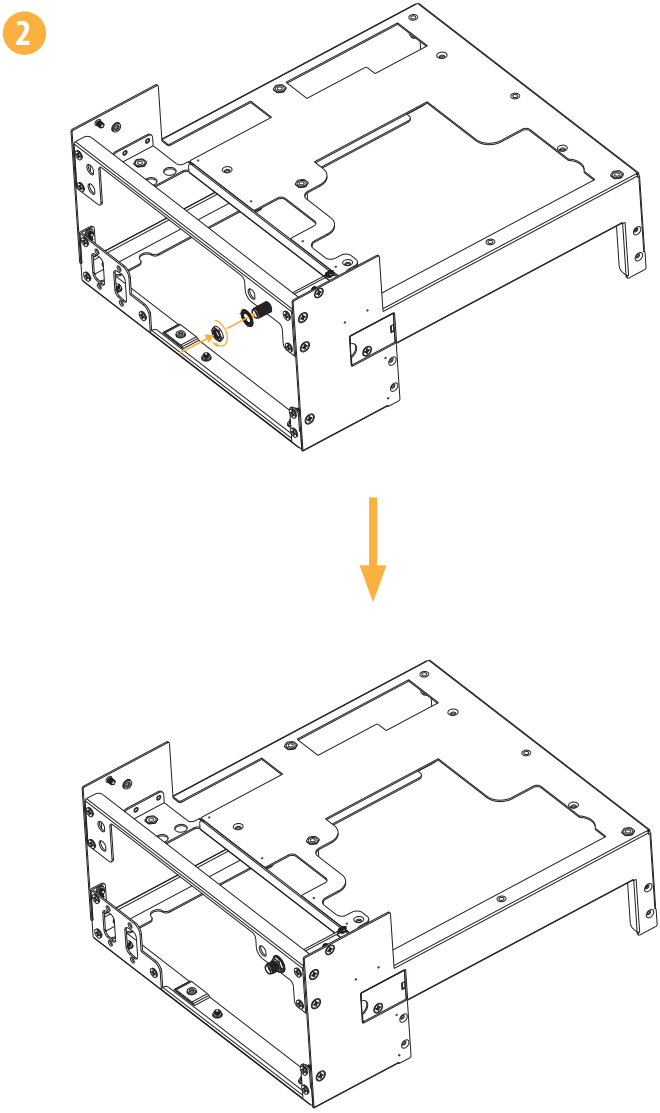

3.14 How to Assemble Card Holder

1. Attach the M4*20, the nut and the spring washer in order onto a screw hole of the card holder.

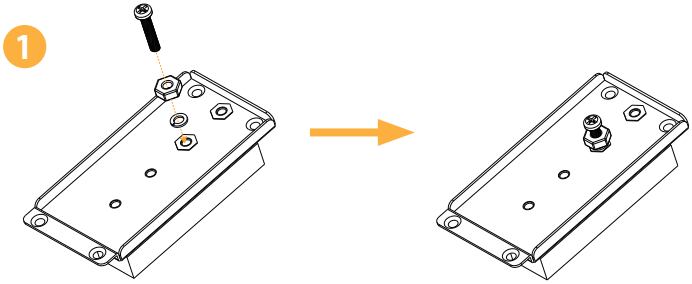

2. Turn back the card holder, and attach the press block to the other side of the screw.

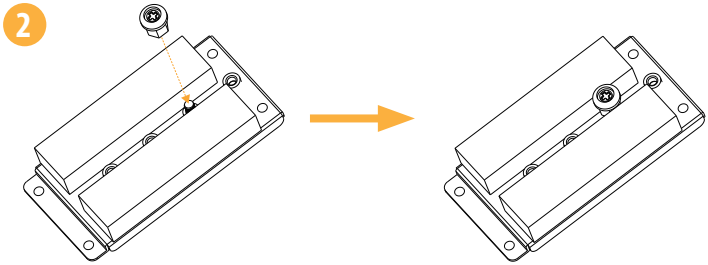

3. Install the card holder to the right-side chassis at a 30-degree angle.

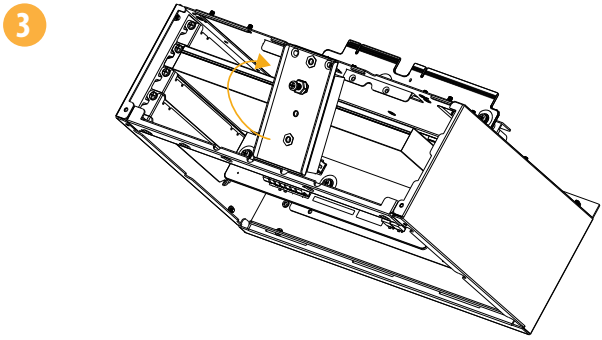

4. Choose either the left, the middle or the right of the chassis according to your expansion card to secure the card holder .

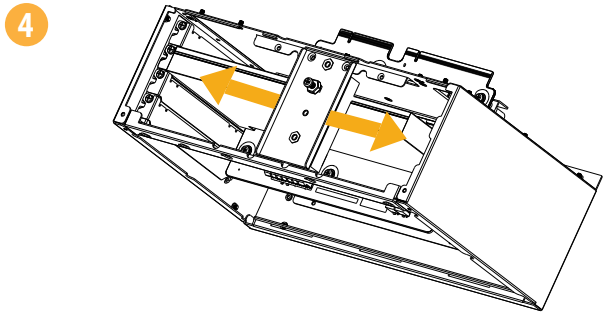

Left Middle Right

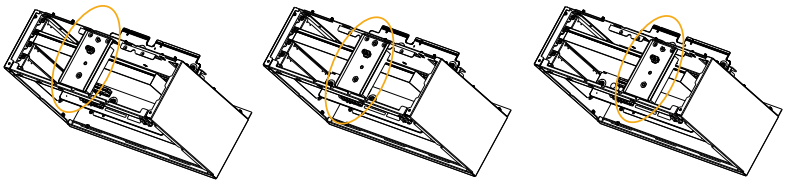

5. Secure the card holder using four #6-32 countersunk head screws.

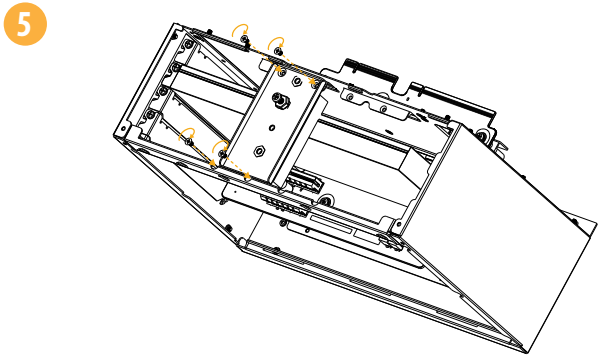

6. Tighten the M4*20 screw against the expansion card underneath.

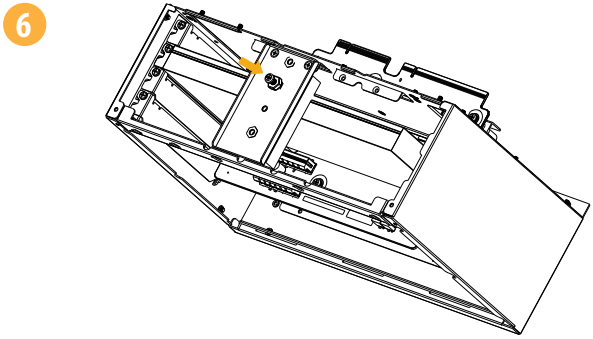

7. Screw on the nut to secure the card holder

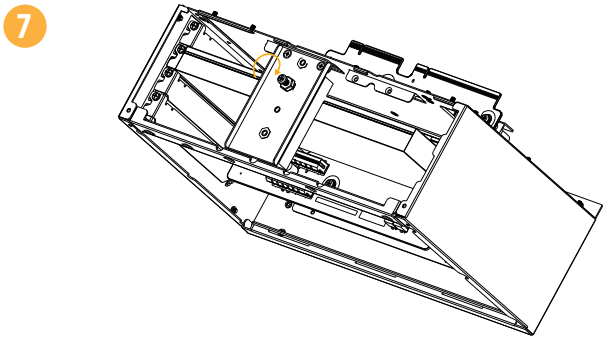

Chapter 4 UEFI Setup Utility

4.1 Introduction

ASRock Industrial UEFI (Unified Extensible Firmware Interface) is a BIOS utility which offers tweak-friendly options in an advanced viewing interface. The UEFI system works with a USB mouse and offers users a faster and sleeker experience.

This BIOS utility can perform the Power-On Self-Test (POST) during system startup, record hardware parameters of the system, load operating system, and so on. The battery on the motherboard supplies the power needed to the CMOS when the system power is turned off, and the values configured in the UEFI utility are kept in the CMOS.

Please note that inadequate BIOS settings may cause system instability, mulfunction or boot failure. We strongly recommend that you do not alter the UEFI default configurations or change the settings only with the assistance of a trained service person.

If the system becomes unstable or fails to boot after you change the setting, try to clear the CMOS values and reset the board to default values. See your motherboard manual for instructions.

4.1.1 Entering BIOS Setup

You may run the UEFI SETUP UTILITY by pressing <F2> or <Delete> right after you power on the computer; otherwise, the Power-On-Self-Test (POST) will continue with its test routines. If you wish to enter the UEFI SETUP UTILITY after POST, restart the system by pressing <Ctl> + <Alt> + <Delete>, or by pressing the reset button on the system chassis. You may also restart by turning the system off and then back on.

This setup guide explains how to use the UEFI SETUP UTILITY to configure all the supported system. The screenshots in this manual are for reference only. UEFI Settings and options may vary owing to different BIOS release versions or CPU installed. Please refer to the actual BIOS version of the motherboard you purchased for detailed screens, settings and options.

4.1.2 UEFI Menu Bar

The top of the screen has a menu bar with the following selections:

Main	For setting system time/date information
Advanced	For advanced system configurations
H/W Monitor	Displays current hardware status
Security	For security settings
Boot	For configuring boot settings and boot priority
Exit	Exit the current screen or the UEFI Setup Utility

Because the UEFI software is constantly being updated, the following UEFI setup screens and descriptions for reference purpose only, and may vary from the latest BIOS and do not exactly match what you see on your screen.

4.1.3 Navigation Keys

Use < ← > key or < → > key to choose among the selections on the menu bar, and use < ↑ > key or < ↓ > key to move the cursor up or down to select items, then press <Enter> to get into the sub screen. You can also use the mouse to click your required item.

Please check the following table for the descriptions of each navigation key.

Navigation Key(s)	Description
+ / -	To change option for the selected items
<Tab>	Switch to next function
<PGUP>	Go to the previous page
<PGDN>	Go to the next page
<HOME>	Go to the top of the screen
<END>	Go to the bottom of the screen
<F1>	To display the General Help Screen
<F7>	Discard changes and exit the SETUP UTILITY
<F9>	Load optimal default values for all the settings
<F10>	Save changes and exit the SETUP UTILITY
<F12>	Print screen
<ESC>	Jump to the Exit Screen or exit the current screen

4.2 Main Screen

When you enter the UEFI SETUP UTILITY, the main screen will appear and display the system overview.

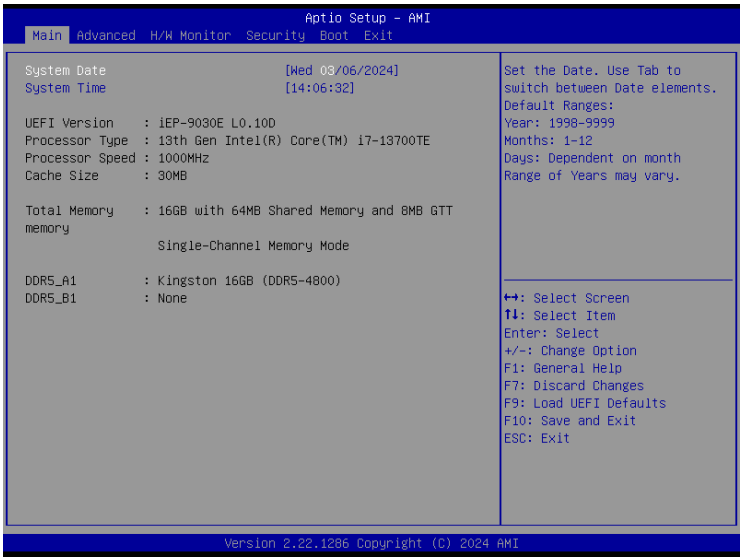

Because the UEFI software is constantly being updated, the following UEFI setup screens and descriptions are for reference purpose only, and they may not exactly match what you see on your screen. Options may also vary depending on the features of your motherboard.

English

4.3 Advanced Screen

In this section, you may set the configurations for the following items: CPU Configuration, Chipset Configuration, Intel(R) Time Coordinated Computing, Storage Configuration, Super IO Configuration, AMT Configuration, ACPI Configuration, USB Configuration, Trusted Computing, and External Ports Control.

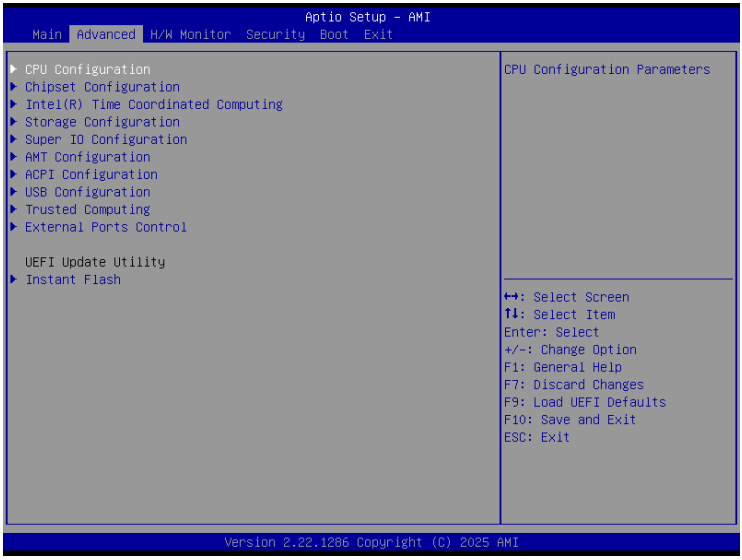

Setting wrong values in this section may cause the system to malfunction.

Instant Flash

Instant Flash is a UEFI flash utility embedded in Flash ROM. This convenient UEFI update tool allows you to update system UEFI without entering operating systems first like Windows®. Just launch this tool and save the new UEFI file to your USB flash drive, floppy disk or hard drive, and then you can update your UEFI in only a few clicks without preparing an additional floppy diskette or other complicated flash utility. Please be noted that the USB flash drive or hard drive must use FAT32/16/12 file system. If you execute Instant Flash utility, the utility will show the UEFI files and their respective information. Select the proper UEFI file to update your UEFI, and reboot your system after UEFI update process completes.

4.3.1 CPU Configuration

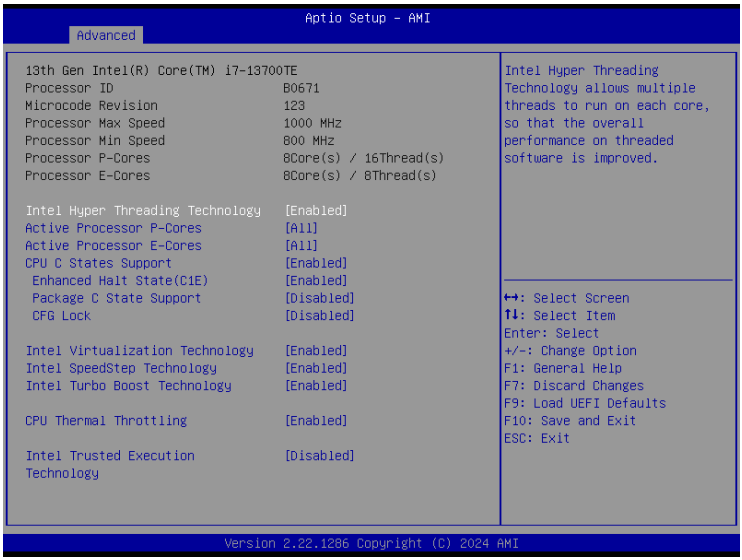

Intel Hyper Threading Technology

Intel Hyper Threading Technology allows multiple threads to run on each core, so that the overall performace on threaded software is improved.

Active Processor P-Cores

Select the number of cores to enable in each processor package.

Active Processor E-Cores

Select the number of cores to enable in each processor package.This allows you to select the number of E-Cores to enable in each processor package. NOTE: Number of P-Cores and E-Cores are looked at together. When both are {0,0}, Pcode will enable all cores.

CPU C States Support

Enable CPU C States Support for power saving. It is recommended to keep C3, C6 and C7 all enabled for better power saving.

Enhanced Halt State (C1E)

Allows you to enable Enhanced Halt State (C1E) for lower power consumption.

Configuration options: [Auto] [Enabled] [Disabled]

Package C State Support

Allows you to enable CPU, PCIe, Memory, Graphics C State Support for power saving.

Configuration options: [Auto] [Enabled] [Disabled]

CFG Lock

The option allows you to enable or disable the CFG Lock.

Configuration options: [Enabled] [Disabled]

Intel Virtualization Technology

Intel Virtualization Technology allows a platform to run multiple operating systems and applications in independent partitions, so that one computer system can function as multiple virtual systems.

Configuration options: [Enabled] [Disabled]

Intel SpeedStep Technology

Intel SpeedStep technology is Intel's new power saving technology. Processors can switch between multiple frequencies and voltage points to enable power saving. The default value is [Enabled].

Configuration options: [Enabled] and [Disabled].

If you install Windows® OS and want to enable this function, please set this item to [Enabled]. This item will be hidden if the current CPU does not support Intel SpeedStep technology.

Please note that enabling this function may reduce CPU voltage and lead to system stability or compatibility issues with some power supplies. Please set this item to [Disabled] if above issues occur.

Intel Turbo Boost Technology

Intel Turbo Boost Technology enables the processor to run above its base operating frequency when the operating system requests the highest performance state.

CPU Thermal Throttling

You may select [Enabled] to enable CPU internal thermal control mechanism to keep the CPU from overheating.

Intel Trusted Execution Technology

The item enables utilization of additional hardware capabilities provided by Intel (R) Trusted Execution Technology. Changes require a full power cycle to take effect.

4.3.2 Chipset Configuration

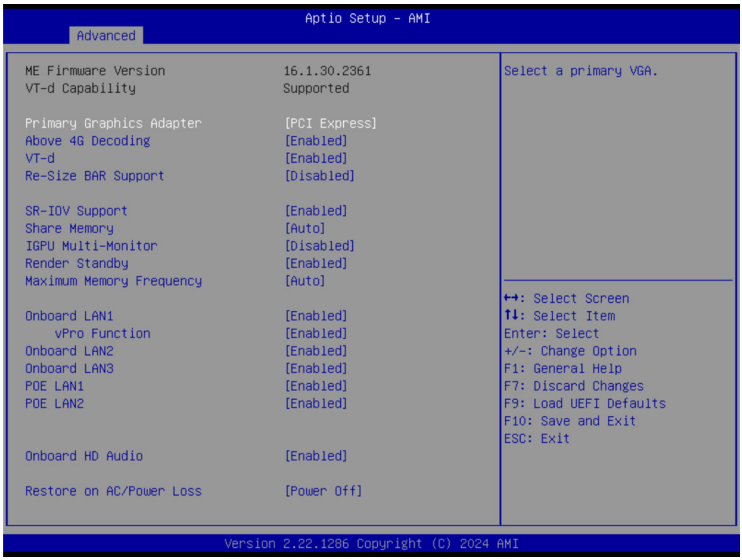

Primary Graphics Adapter

Select a primary VGA.

Above 4G Decoding

Enable or disable 64bit capable Devices to be decoded in Above 4G Address Space (only if the system supports 64 bit PCI decoding).

VT-d

Intel® Virtualization Technology for Directed I/O helps your virtual machine monitor better utilize hardware by improving application compatibility and reliability, and providing additional levels of manageability, security, isolation, and I/O performance.

Configuration options: [Enabled] [Disabled]

Re-Size BAR Support

If system has Resizable BAR capable PCIe Devices, this option enables or disables Resizable BAR Support.

SR-IOV Support

If system has SR-IOV capable PCIe Devices, this option Enables or Disables Single Root IO Virtualization Support.

Configuration options: [Enabled] [Disabled]

Share Memory

Configure the size of memory that is allocated to the integrated graphics processor when the system boots up.

IGPU Multi-Monitor

This allows you to enable or disable IGPU Multi-Monitor. The default value is [Disabled].

Render Standby

Power down the render unit when the GPU is idle for lower power consumption.

Maximum Memory Frequency

The maximum operating frequency of the memory controller, adjustable within the BIOS settings.

Onboard LAN1

This allows you to enable or disable the Onboard LAN1 feature.

vPro Function

Enable/Disable vPro SMLink of LAN port. Select Enabled if you would like to utilize LAN port with vPro. Select Disabled if you would like to utilize LAN port as DHCP Server. Please turn off the computer and unplug the power cord from the power supply after the setting has been changed.

Onboard LAN2

This allows you to enable or disable the Onboard LAN2 feature.

Onboard LAN3

This allows you to enable or disable the Onboard LAN3 feature.

POE LAN1

This allows you to enable or disable the POE LAN1 feature.

POE LAN2

This allows you to enable or disable the POE LAN2 feature.

Onboard HD Audio

Onboard HD Audio allows you to enable or disable the onboard HD audio controller. Set this item to [Auto] to enable the onboard HD and automatically disable it when a sound card is installed.
Configuration options: [Enabled] [Disabled]

Restor on AC/Power Loss

The option allows you to select the power state after a power failure.
[Power Off] sets the power to remain off when the power recovers.
[Power On] sets the system to start to boot up when the power recovers.

4.3.3 Intel(R) Time Coordinated Computing

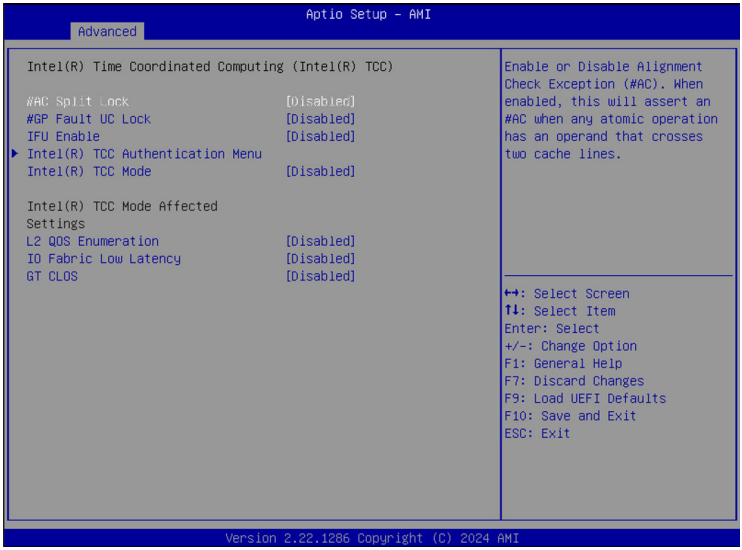

#AC Split Lock

Enable or Disable Alignment Check Exception (#AC). When enabled, this will assert an #AC when any atomic operation has an operand that crisses two cache lines.

#GP Fault UC Lock

Enable or Disable GP Fault Exception (GP#). When enabled, this will assert an GP# when encountering a Lock to un-cacheable memory before the bus is locked.

IFU Enable

Enable or Disable Instruction Fetch Unit(IFU). When enabled, Instructions will be prefetch to the cache.

Inte(R) TCC Authentication Menu

Press Enter to configure Intel(R) TCC Authentication Menu options.

Intel(R) TCC Mode

Enable or Disable Intel(R) TCC Mode. When enabled, this will modify system settings to improve real-time performance. The full list of settings and their current state are displayed below when Intel(R) TCC mode is enabled.

L2 QOS Enumeration

Enable or Disable L2 QOS Enumerate. When Enable CPUID Enumeration for L2 QOS gets enabled.

IO Fabric Low Latency

Enable or Disable IO Fabric Low Latency. This will turn off some power management in the PCH IO fabrics. This option provides the most aggressive IO Fabric performance setting. S3 state is NOT supported.

GT CLOS

Enable or Disable Graphics Technology(GT) Class of Service. Enable will reduce Gfx LLC allocation to minimize impact of Gfx workload on LLC.

4.3.4 Storage Configuration

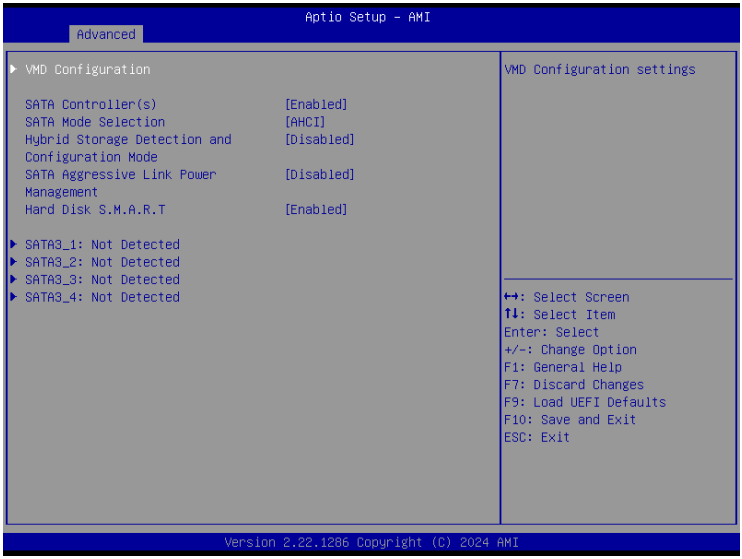

VMD Configuration

This item allows you to enable or disable the Intel VMD support function.

SATA Controller(s)

The option allows you to enable or disable the SATA controllers.

Configuration options: [Enabled] [Disabled]

SATA Mode Selection

AHCI supports new features that improve performance.

Configuration option: [AHCI]

AHCI (Advanced Host Controller Interface) supports NCQ and other new features that will improve SATA disk performance.

Hybrid Storage Detection and Configuration Mode

The option allows you to select Hybrid Storage Detection and Configuration Mode.

Configuration options: [Dynamic Configuration for Hybrid Storage Enable] [Disabled]

SATA Aggressive Link Power Management

SATA Aggressive Link Power Management allows SATA devices to enter a low power state during periods of inactivity to save power. It is supported only by AHCI mode.

Configuration options: [Enabled] [Disabled]

Hard Disk S.M.A.R.T

S.M.A.R.T stands for Self-Monitoring, Analysis, and Reporting Technology. It is a monitoring system for computer hard disk drives to detect and report on various indicators of reliability.

Configuration options: [Enabled] [Disabled]

4.3.5 Super IO Configuration

```
Aptio Setup - AMI
Advanced

COM1                          [Enabled]
    Type Select               [RS232]
COM2                          [Enabled]
    Type Select               [RS232]
COM3                          [Enabled]
COM4                          [Enabled]
COM5                          [Enabled]
    Type Select               [RS232]
COM6                          [Enabled]
    Type Select               [RS232]

WDT Timeout Reset             [Disabled]

DIO1 Type Select              [Input]
DIO2 Type Select              [Input]
DIO3 Type Select              [Input]
DIO4 Type Select              [Input]
DIO5 Type Select              [Input]
DIO6 Type Select              [Input]
DIO7 Type Select              [Input]
DIO8 Type Select              [Input]
DIO11 Type Select             [Output High]
DIO12 Type Select             [Output High]
DIO13 Type Select             [Output High]
DIO14 Type Select             [Output High]

Enable or Disable COM1
IO=3F8h; IRQ=4;

↔: Select Screen
↑↓: Select Item
Enter: Select
+/-: Change Option
F1: General Help
F7: Discard Changes
F9: Load UEFI Defaults
F10: Save and Exit
ESC: Exit

Version 2.22.1286 Copyright (C) 2024 AMI
```

```
Aptio Setup - AMI
Advanced

COM3                          [Enabled]
COM4                          [Enabled]
COM5                          [Enabled]
    Type Select               [RS232]
COM6                          [Enabled]
    Type Select               [RS232]

WDT Timeout Reset             [Disabled]

DIO1 Type Select              [Input]
DIO2 Type Select              [Input]
DIO3 Type Select              [Input]
DIO4 Type Select              [Input]
DIO5 Type Select              [Input]
DIO6 Type Select              [Input]
DIO7 Type Select              [Input]
DIO8 Type Select              [Input]
DIO11 Type Select             [Output High]
DIO12 Type Select             [Output High]
DIO13 Type Select             [Output High]
DIO14 Type Select             [Output High]
DIO15 Type Select             [Output High]
DIO16 Type Select             [Output High]
DIO17 Type Select             [Output High]
DIO18 Type Select             [Output High]

Set DIO Type.

↔: Select Screen
↑↓: Select Item
Enter: Select
+/-: Change Option
F1: General Help
F7: Discard Changes
F9: Load UEFI Defaults
F10: Save and Exit
ESC: Exit

Version 2.22.1286 Copyright (C) 2024 AMI
```

COM1

Use this to set parameters of COM1.

Type Select

Use this to select COM1 port type: [RS232], [RS422] or [RS485].

COM2

Use this to set parameters of COM2.

Type Select

Use this to select COM2 port type: [RS232], [RS422] or [RS485].

COM3

Use this to set parameters of COM3.

COM4

Use this to set parameters of COM4.

COM5

Use this to set parameters of COM5.

Type Select

Use this to select COM5 port type: [RS232], [RS422] or [RS485].

COM6

Use this to set parameters of COM6.

Type Select

Use this to select COM6 port type: [RS232], [RS422] or [RS485].

WDT Timeout Reset

Use this to set the Watch Dog Timer.

DI01 Type Select

Use this to set DIO Type: [Input].

DI02 Type Select

Use this to set DIO Type: [Input].

DI03 Type Select

Use this to set DIO Type: [Input].

DI04 Type Select

Use this to set DIO Type: [Input].

DI05 Type Select

Use this to set DIO Type: [Input].

DI06 Type Select

Use this to set DIO Type: [Input].

DI07 Type Select

Use this to set DIO Type: [Input].

DI08 Type Select

Use this to set DIO Type: [Input].

DI011 Type Select

Use this to set DIO Type: [Output Low] or [Output High].

DI012 Type Select

Use this to set DIO Type: [Output Low] or [Output High].

DI013 Type Select

Use this to set DIO Type: [Output Low] or [Output High].

DI014 Type Select

Use this to set DIO Type: [Output Low] or [Output High].

DI015 Type Select

Use this to set DIO Type: [Output Low] or [Output High].

DI016 Type Select

Use this to set DIO Type: [Output Low] or [Output High].

DI017 Type Select

Use this to set DIO Type: [Output Low] or [Output High].

DI018 Type Select

Use this to set DIO Type: [Output Low] or [Output High].

4.3.6 ACPI Configuration

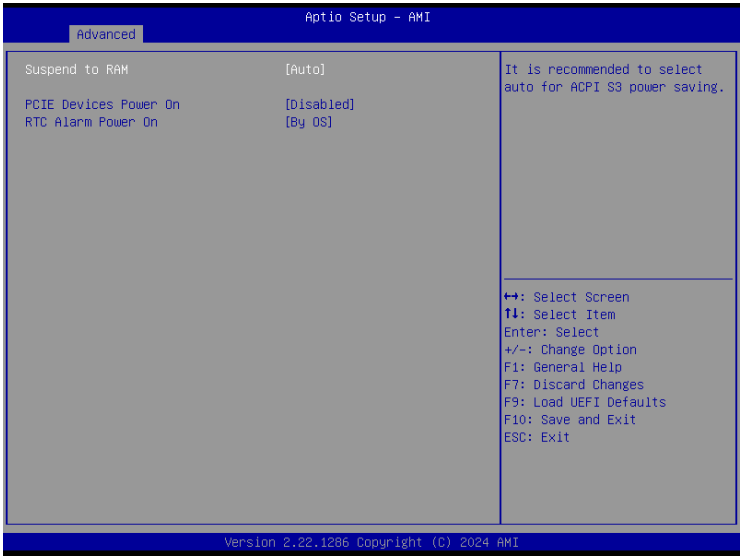

Suspend to RAM

Suspend to RAM allows you to select [Disabled] for ACPI suspend type S1. It is recommended to select [Auto] for ACPI S3 power saving.

Configuration options: [Auto] [Disabled]

PCIE Devices Power On

Use this item to enable or disable PCIE devices to turn on the system from the power-soft-off mode.

RTC Alarm Power On

RTC Alarm Power On allows the system to be waked up by the real time clock alarm. Set it to By OS to let it be handled by your operating system.

Configuration options: [Enabled] [Disabled] [By OS]

4.3.7 USB Configuration

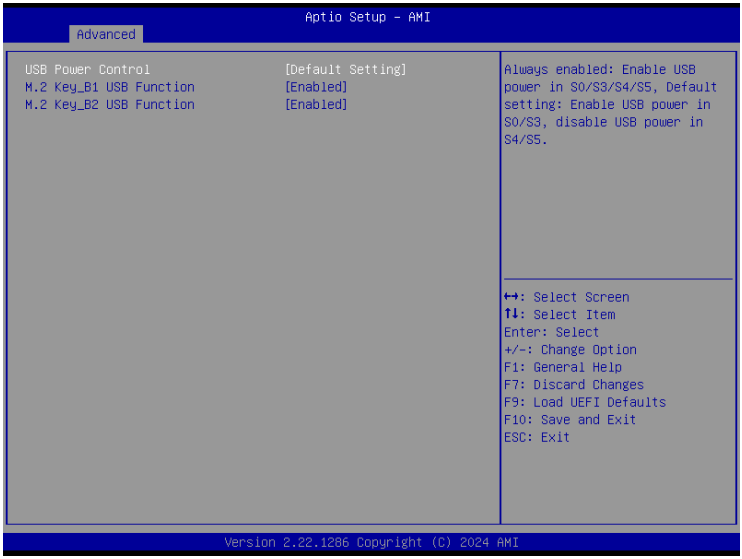

USB Power Control

Use this option to control USB power.

M.2 Key_B1 USB Function

Use this option to enable or disable M.2 Key_B1 USB Function.

M.2 Key_B2 USB Function

Use this option to enable or disable M.2 Key_B2 USB Function.

4.3.8 AMT Configuration

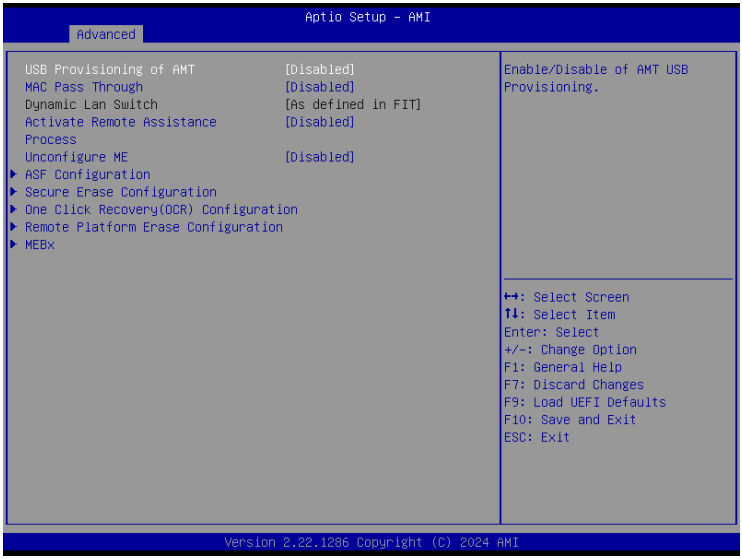

USB Provisioning of AMT

Enable/Disable of AMT USB Provisioning.

MAC Pass Through

Enable/Disable MAC Pass Through function.

Dynamic Lan Switch

Allow switching AMT support from Integrated LAN to Discrete LAN.

Activate Remote Assistance Process

Trigger CIRA boot.

Unconfigure ME

Unconfigure ME with resetting MEBx password to default on next boot.

ASF Configuration

Configure Alert Standard Format parameters.

Secure Erase Configuration

Secure Erase configuration menu.

One Click Recovery(OCR) Configuration

Configuration setting for One Click Recovery. This allows access for AMT to boot a recovery OS application.

Remote Platform Erase Configuration

Remote Platform Erase configuration menu.

MEBx

This Formset contains forms for configuring MEBx.

4.3.9 Trusted Computing

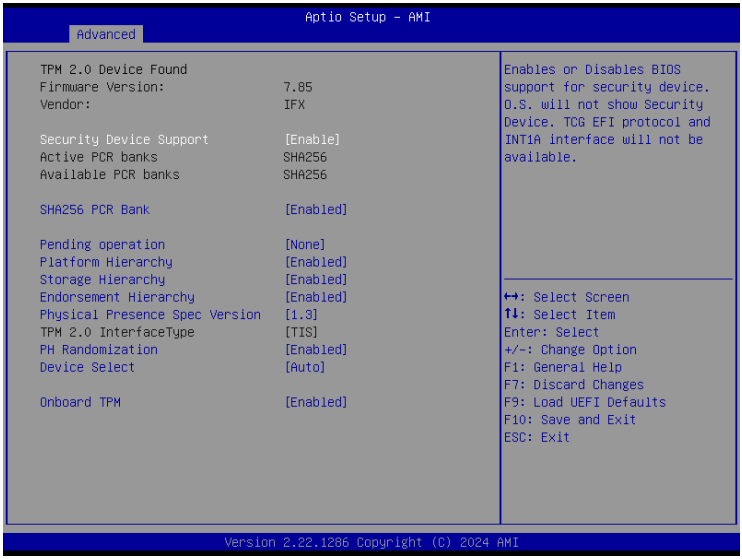

Security Device Support

Security Device Support allows you to enable or disable BIOS support for security device. O.S. will not show Security Device. TCG EFI protocol and INT1A interface will not be available.

Configuration options: [Enabled] [Disabled]

Active PCR banks

This item displays active PCR Banks.

Available PCR Banks

This item displays available PCR Banks.

SHA256 PCR Bank

SHA256 PCR Bank allows you to enable or disable SHA256 PCR Bank.

Configuration options: [Enabled] [Disabled]

Pending Operation

Pending Operation allows you to schedule an Operation for the Security Device.

NOTE: Your computer will reboot during restart in order to change State of the Device.

Configuration options: [None] [TPM Clear]

Platform Hierarchy

This item allows you to enable or disable Platform Hierarchy.

Configuration options: [Enabled] [Disabled]

Storage Hierarchy

This item allows you to enable or disable Storage Hierarchy.

Configuration options: [Enabled] [Disabled]

Endorsement Hierarchy

This item allows you to enable or disable Endorsement Hierarchy.

Configuration options: [Enabled] [Disabled]

Physical Presence Spec Version

Select this item to tell OS to support PPI spec version 1.2 or 1.3. Please note that some HCK tests might not support version 1.3.

Configuration options: [1.2] [1.3]

TPM 2.0 InterfaceType

This item allows you to view the Communication Interface to TPM 2.0 Device: CRB or ITS.

PH Randomization

The item enables or disables Platform Hierarchy randomization.

Device Select

This item allows you to select the TPM device to be supported.

[TPM 1.2] restricts support to TPM 1.2 devices.

[TPM 2.0] restricts support to TPM 2.0 devices.

[Auto] supports both TPM 1.2 and TPM 2.0 devices with the default set to TPM 2.0 devices. If TPM 2.0 devices are not found, TPM 1.2 devices will be enumerated.

Onboard TPM

The option enables or disables Intel PTT in ME. Disable this option to use discrete TPM Module.

4.3.10 External Ports Control

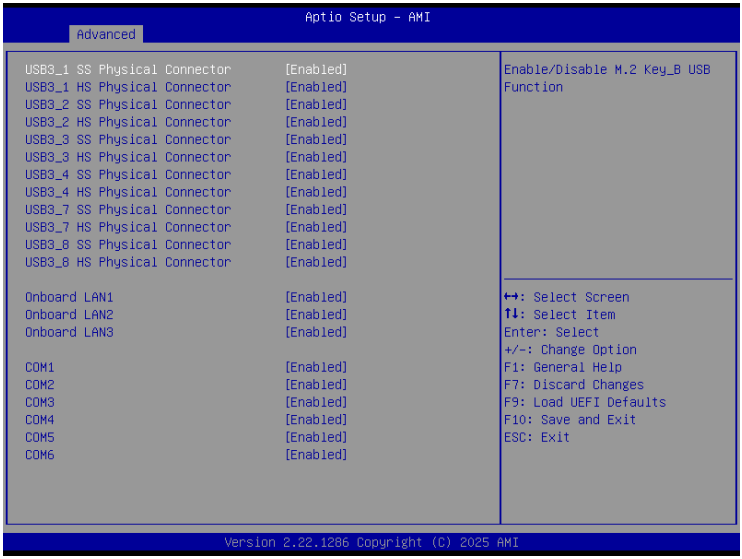

USB3_1 SS Physical Connector

Use this to enable or disable the USB 3.0 Super-speed function of physical connector 1.

USB3_1 HS Physical Connector

Use this to enable or disable the USB 2.0 High-speed function of physical connector 1.

USB3_2 SS Physical Connector

Use this to enable or disable the USB 3.0 Super-speed function of physical connector 2.

USB3_2 HS Physical Connector

Use this to enable or disable the USB 2.0 High-speed function of physical connector 2.

USB3_3 SS Physical Connector

Use this to enable or disable the USB 3.0 Super-speed function of physical connector 3.

USB3_3 HS Physical Connector

Use this to enable or disable the USB 2.0 High-speed function of physical connector 3.

USB3_4 SS Physical Connector

Use this to enable or disable the USB 3.0 Super-speed function of physical connector 4.

USB3_4 HS Physical Connector

Use this to enable or disable the USB 2.0 High-speed function of physical connector 4.

USB3_5 SS Physical Connector

Use this to enable or disable the USB 3.0 Super-speed function of physical connector 5.

USB3_5 HS Physical Connector

Use this to enable or disable the USB 2.0 High-speed function of physical connector 5.

USB3_6 SS Physical Connector

Use this to enable or disable the USB 3.0 Super-speed function of physical connector 6.

USB3_6 HS Physical Connector

Use this to enable or disable the USB 2.0 High-speed function of physical connector 6.

USB3_7 SS Physical Connector

Use this to enable or disable the USB 3.0 Super-speed function of physical connector 7.

USB3_7 HS Physical Connector

Use this to enable or disable the USB 2.0 High-speed function of physical connector 7.

USB3_8 SS Physical Connector

Use this to enable or disable the USB 3.0 Super-speed function of physical connector 8.

USB3_8 HS Physical Connector

Use this to enable or disable the USB 2.0 High-speed function of physical connector 8.

Onboard LAN1

This allows you to enable or disable the Onboard LAN1 feature.

Onboard LAN2

This allows you to enable or disable the Onboard LAN2 feature.

Onboard LAN3

This allows you to enable or disable the Onboard LAN3 feature.

COM1

Use this to set parameters of COM1.

COM2

Use this to set parameters of COM2.

COM3

Use this to set parameters of COM3.

COM4

Use this to set parameters of COM4.

COM5

Use this to set parameters of COM5.

COM6

Use this to set parameters of COM6.

4.4 Hardware Health Event Monitoring Screen

In this section, it allows you to monitor the status of the hardware on your system, including the parameters of the CPU temperature, motherboard temperature, CPU fan speed, chassis fan speed, and the critical voltage.

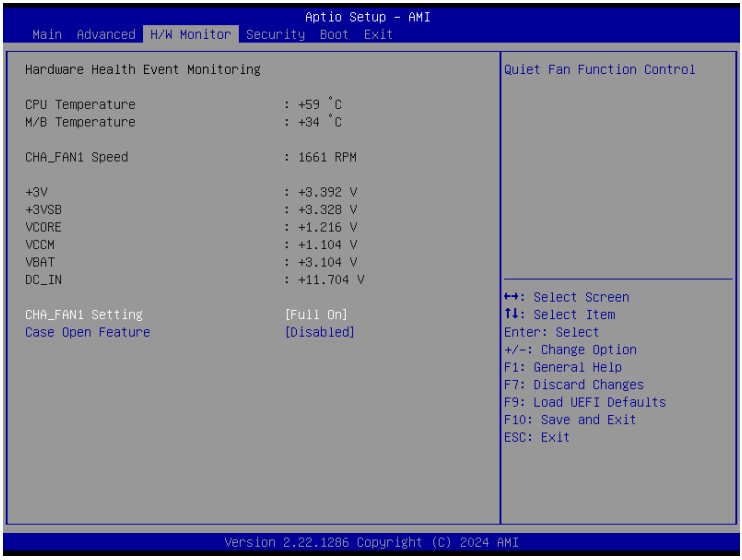

CHA_FAN1 Setting

Select a fan mode for Chassis Fan 1, or choose Customize to set 5 CPU temperatures and assign a respective fan speed for each temperature.

Case Open Feature

Enable or disable Case Open Feature to detect whether the chassis cover has been removed.

Clear Status

This option appears only when the case open has been detected. Use this option to keep or clear the record of previous chassis intrusion status.

4.5 Security Screen

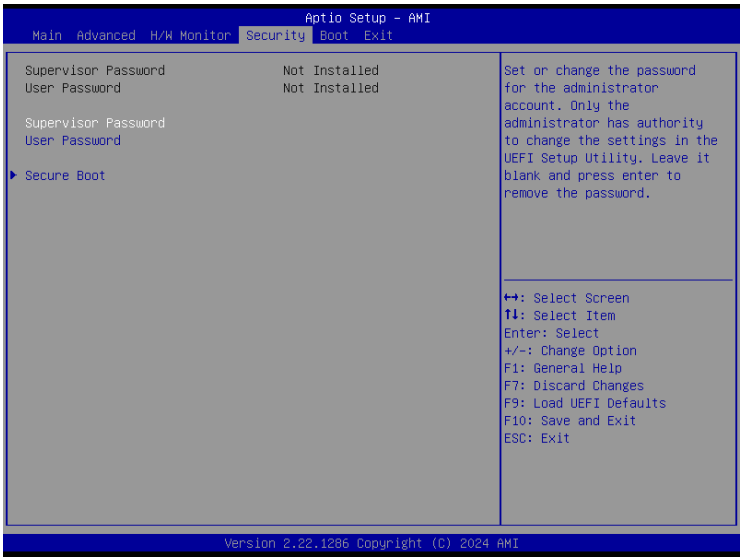

Supervisor Password

Set or change the password for the administrator account. Only the administrator has authority to change the settings in the UEFI Setup Utility. Leave it blank and press enter to remove the password.

User Password

Set or change the password for the user account. Users are unable to change the settings in the UEFI Setup Utility. Leave it blank and press enter to remove the password.

Secure Boot

Enable to support Windows Secure Boot.

4.6 Boot Screen

In this section, it will display the available devices on your system for you to configure the boot settings and the boot priority.

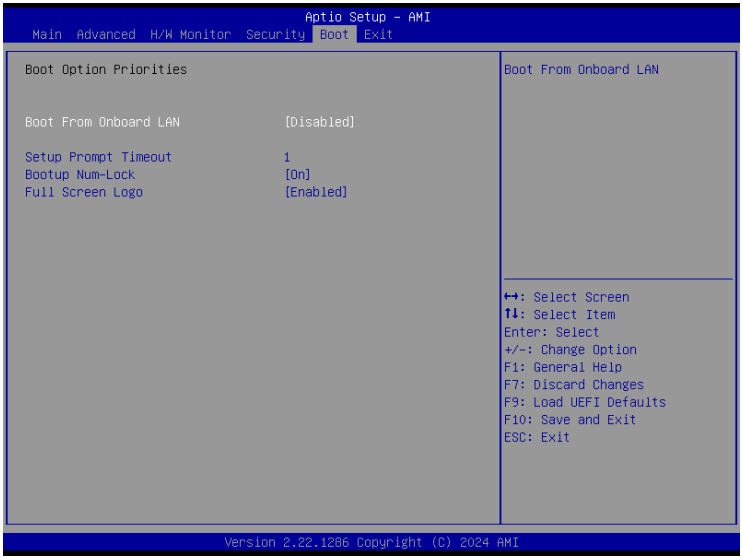

Boot From Onboard LAN

The item allows the system to be waked up by the onboard LAN.

Configuration options: [Enabled] [Disabled]

Setup Prompt Timeout

The item allows you to configure the number of seconds to wait for the UEFI setup utility. 65535(0XFFFF) means indefinite waiting.

Configuration options: [1] - [65535]

Bootup Num-Lock

The item allows you to select whether Num Lock should be turned on or off when the system boots up.

Configuration options: [On] [Off]

Full Screen Logo

[Enabled] Select this item to display the boot logo.

[Disabled] Select this item to show normal POST messages.

4.7 Exit Screen

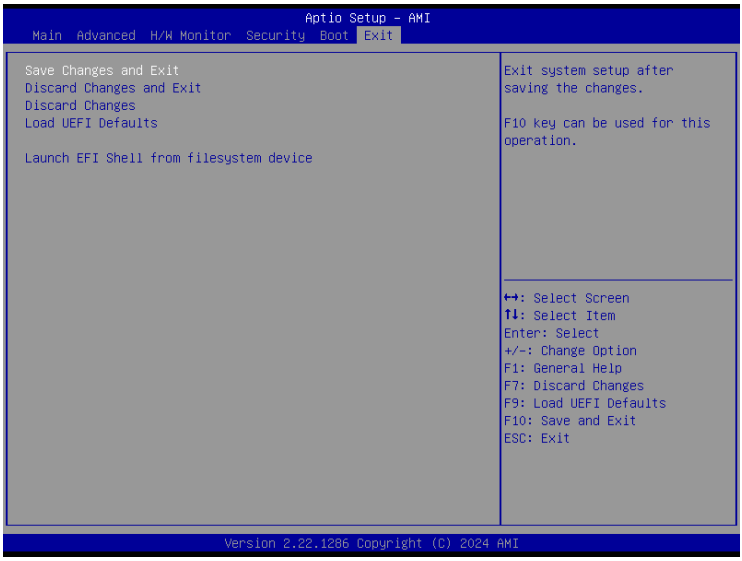

Save Changes and Exit

When you select this option, the following message "Save configuration changes and exit setup?" will pop out. Select [Yes] to save the changes and exit the UEFI SETUP UTILITY.

Discard Changes and Exit

When you select this option, the following message "Discard changes and exit setup?" will pop out. Select [Yes] to exit the UEFI SETUP UTILITY without saving any changes.

Discard Changes

When you select this option, the following message "Discard changes?" will pop out. Select [Yes] to discard all the changes.

Load UEFI Defaults

The item allows you to load UEFI default values for all options. The F9 key can be used for this operation.

Launch EFI Shell from filesystem device

The item allows you to copy shellx64.efi to the root directory to launch EFI Shell.

Chapter 5 Appendix

Appendix 1 Power Consumption

The power consumption (W)= voltage (V) x current (A)

The system's full loading means it is populated with such as DRAM, M.2 Module, and so on. The iEPF-9030S Series/iEPF-9040S Series also includes riser cards.

The following information is for reference only. Actual power consumption will vary with different attached devices and operating system.

iEP-9030E Series/iEP-9040E Series

CPU	System's Full Loading	Total Power Consumption	Recommended Power Supply
35W	152.5W	187.5W	330W
45W	152.5W	197.5W	330W
65W	152.5W	217.5W	330W

iEPF-9030S Series/iEPF-9040S Series

CPU	System's Full Loading (w/ Riser Card)	Total Power Consumption	Recommended Power Supply
35W	407.5W	442.5W	648W
45W	407.5W	452.5W	648W
65W	407.5W	472.5W	648W

iEP-9032E Series/iEP-9042E Series

CPU	System's Full Loading (w/ Riser Card)	Total Power Consumption	Recommended Power Supply
35W	148.5W	183.5W	330W
45W	148.5W	193.5W	330W
65W	148.5W	213.5W	330W

iEPF-9032S Series/iEPF-9042S Series

CPU	System's Full Loading (w/ Riser Card)	Total Power Consumption	Recommended Power Supply
35W	403.5W	438.5W	648W
45W	403.5W	448.5W	648W
65W	403.5W	468.5W	648W

Appendix 2 Link to the API Library

If you need the link to the API library, feel free to contact us at IPC_TSD@asrockind.com

Appendix 3 How to Install Power Supply or Power Adapter

The V+ and V- pins provide DC power input and the chassis ground pin allows connection of the chassis to ground for better EMC compatibility. The DC power input for the iEP(F)-9030 Series/iEP(F)-9040 Series supports a voltage input range from 9V to 36V DC.

Pin	Definition	Pin	Definition
1	V+	3	V-
2	V+	4	V-

3.1 648W Power Supply (MEANWELL HRP-600-24)

➔ AC Power Side:

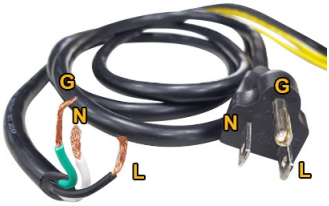

➔ DC Power Side:

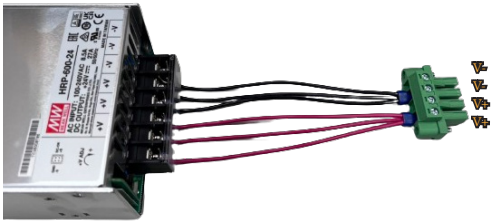

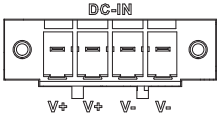

3.2 330W Power Adapter (FSP330-AAAN3)

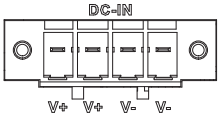

English